OWNERS MANUAL

2001: Couch Cane

WARNING: Do not assemble, or use product until you have reviewed and understand the included:

- SAFETY WARNINGS
- ASSEMBLY INSTRUCTIONS

Keep this manual for future reference.
Installer/Assembler: Leave these instructions with the consumer.
For questions or clarification, contact Stander at (800) 506-9901 or (435) 755-0453
2410 Heritage Dr. Logan UT 84321 sales@stander.com www.stander.com

English- For Owners Manual in English: www.stander.com/product-manuals

Español- Para manual del propietario en Español: www.stander.com/product-manuals

Deutsch- Für das Benutzerhandbuch auf Deutsch: www.stander.com/product-manuals

Français- Pour le manuel du propriétaire en Français: www.stander.com/product-manuals

Italiano- Per il manuale del proprietario in Italiano: www.stander.com/product-manuals

LIMITED LIFETIME WARRANTY

To register your product for a Limited Lifetime Warranty, please Visit stander.com/product-registration.

Stander, Inc. ("Stander") warrants to the original purchaser that the Product will be free from material defects in material or workmanship for the lifetime of the product. This limited lifetime warranty applies only when the Product is used consistent with the Product's specifications and is non-transferable and shall solely be applicable to the original purchaser.

In the event of a warranty claim, the original purchaser must notify Stander, during the warranty period, in writing of the alleged defect in workmanship or material and must ship the Product, along with the proof of purchase, to Stander.

All shipping costs must be paid by the original purchaser. Stander will not refund or pay for any shipping charges.

If Stander determines, upon its sole determination, that there is a material defect in the material or workmanship of the Product, Stander will either send replacement parts or, if needed, replace the product and ship a replacement product or parts to the original purchaser.

The limited lifetime warranty does NOT apply to any Product:

(1) That has been damaged in any way.
(2) That has been altered or modified in any way or is used with any unauthorized attachments.
(3) That was not properly installed or that was not used in accordance with the instructions provided by Stander.
(4) That was used for purposes other than those for which the Product was designed or intended.
(5) Damaged due to abuse, misuse, mishandling, neglect, misapplication, accident or abnormal use or storage.

STANDER MAKES NO WARRANTIES OTHER THAN THOSE EXPRESSLY SET FORTH HEREIN. ALL OTHER WARRANTIES, EXPRESS OR IMPLIED INCLUDING ALL (I) IMPLIED WARRANTIES OF MERCHANTABILITY OR FITNESS FOR A PARTICULAR PURPOSE, OR (II) IMPLIED WARRANTIES ARISING FROM ANY COURSE OF DEALING, USAGE OF TRADE, ADVERTISING OR PERFORMANCE OF PRODUCTS TO STANDARDS SPECIFIC TO THE COUNTRY OF IMPORT, ARE HEREBY EXPRESSLY DISCLAIMED.

THIS LIMITED LIFETIME WARRANTY IS THE FULL AND COMPLETE STATEMENT OF STANDER'S LIMITED LIFETIME WARRANTY OF THE PRODUCT, CONSTITUTES THE ENTIRE AND COMPLETELY INTEGRATED LIMITED LIFETIME WARRANTY OF STANDER, SUPERSEDES ALL OTHER STATEMENTS, AND CANNOT BE VARIED BY ANY ORAL OR OTHER WRITTEN STATEMENT.

THE EXCLUSIVE REMEDY FOR BREACH OF THIS LIMITED LIFETIME WARRANTY IS TO RETURN THE PRODUCT FOR THE REPLACEMENT OF THE NONCONFORMING PRODUCT.

UNDER NO CIRCUMSTANCES SHALL STANDER, INC. BE LIABLE FOR ANY SPECIAL, INCIDENTAL, EXEMPLARY, PUNITIVE, CONSEQUENTIAL DAMAGES, OR OTHER DAMAGES, BASED UPON BREACH OF THIS LIMITED WARRANTY, BREACH OF CONTRACT, OR STRICT LIABILITY.

Some states do not allow limitations on how long an implied warranty lasts. This warranty gives you specific legal rights, and you may also have other rights which vary from state to state. To obtain service under this Limited Warranty, you can reach Stander at (800) 506-9901 or (435) 755-0453.

DISCLAIMER: Neither Stander nor the manufacturer will be liable for any harm or injury that results from the improper use or assembly of the product.

Do not use or attempt to install this product unless you read and understand these warnings and follow all instructions.

EC REP
BEO MedConsulting Berlin GmbH
Helmholtzstr. 2-9
10587 Berlin, Germany

Stander, Inc.
2410 S. Heritage Dr.
Logan Utah 84321
USA
www.stander.com
1.800.506.9901

MD

SAFETY WARNINGS

1. NEVER use product unless installed per ASSEMBLY INSTRUCTIONS. If you have any questions about compatibility, installation, or safe use, please contact Stander at (800) 506-9901 or (435) 755-0453.

2. This product is for adult use only and is intended to assist disabled persons by providing minimal to moderate weight support while standing from a couch or chair. This product is NEVER to be used by people with Alzheimer's disease, dementia, restlessness, or those who are sedated, confused or frail.

3. STOP using product immediately if product is damaged, broken, or if parts are missing. STOP using product immediately if product shifts out of its original position until it is readjusted into the correct position.

4. Regularly check the product to make sure it is installed and positioned per the ASSEMBLY INSTRUCTIONS. This product should not be used on any lightweight furniture that would allow the product to become dislodged or move during use of the product.

5. If this product is used in a nursing home, assisted living center, or a similar facility, follow all of the facility's policies. DO NOT install or use this product if it does not comply with the facility's policies.

6. In the rare occurrence of a serious event with any Stander product, contact Stander at (800) 506-9901 or (435) 755-0453 immediately. A serious event is defined as death or serious deterioration in health that results in a life-threatening illness or injury, permanent impairment, hospitalization, or surgical intervention. Also report to the competent authority of your member state.

7. If product is removed, DO NOT reinstall until you have read and fully understand the included SAFETY WARNINGS and ASSEMBLY INSTRUCTIONS.

8. NEVER use product on a bed. Do not alter the product in any way or vary the intended use of the product. No external items should be attached to this product.

9. Children should not be allowed to hang on or play with this product.

ASSEMBLY INSTRUCTIONS

WARNING: Do not begin assembly until you have reviewed and understand the included SAFETY WARNINGS.

For questions or clarification, contact Stander at (800) 506-9901 or (435) 755-0453 before proceeding.

Failure to follow these instructions increases the risk of serious injury or death.

SPECIFICATIONS

Product Name: Couch Cane

Product #: 2001

Maximum User Weight: 250lbs (113kg)

Compatibility: Only for use with chairs, couches, or sofas. NEVER use on beds.

Cleaning: Clean product with warm water and soap. Dry thoroughly before using.

Recycling: Product should be recycled in accordance with national guidelines.

Hardware / Tools

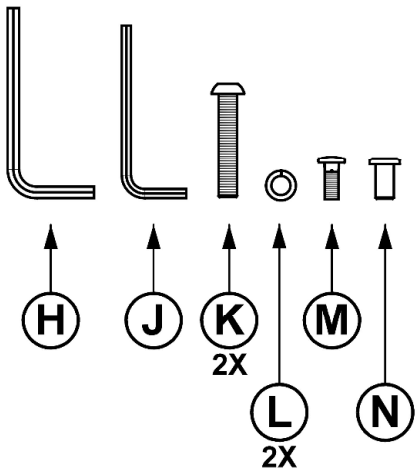

1. Remove product from box and identify all parts as shown in *FIGURE 1.*

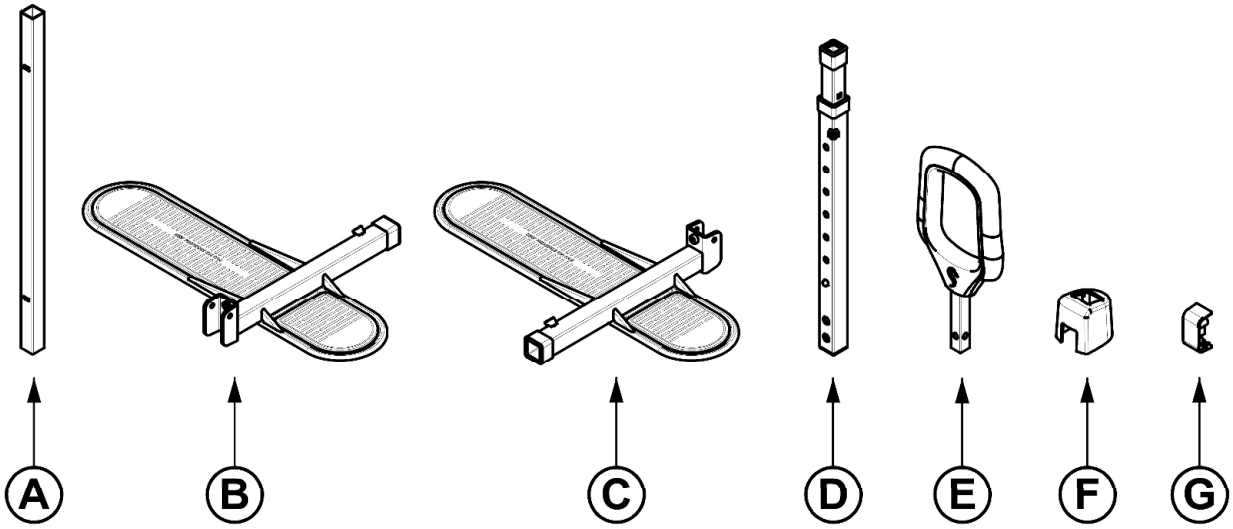

FIGURE 1

2. Decide which side of furniture product will be installed on. This will determine which Foot (**B** or **C**) will be considered the front or rear as shown in *FIGURE 2.* Right side installation will be shown throughout the rest of these instructions. For left side installation, simply swap Foot **B** for Foot **C**.

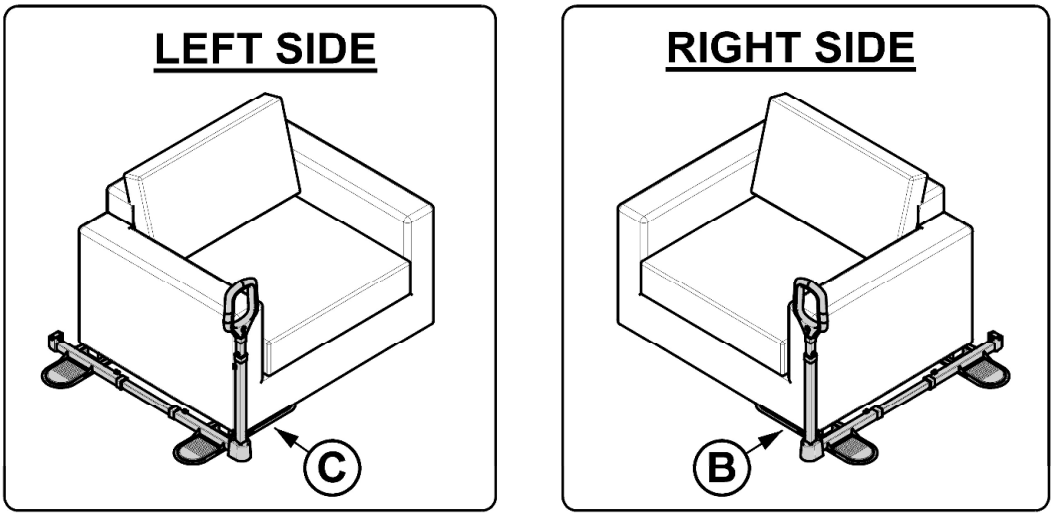

FIGURE 2

3. Space out Feet **B** and **C** so that the center of the pads are the same width as furniture feet. Ensure MAX markings on Foot Connector **A** are covered by Feet **B** and **C** and tighten SET SCREWS on Feet **B** and **C** with Tool **H** as shown in *FIGURE 3*.

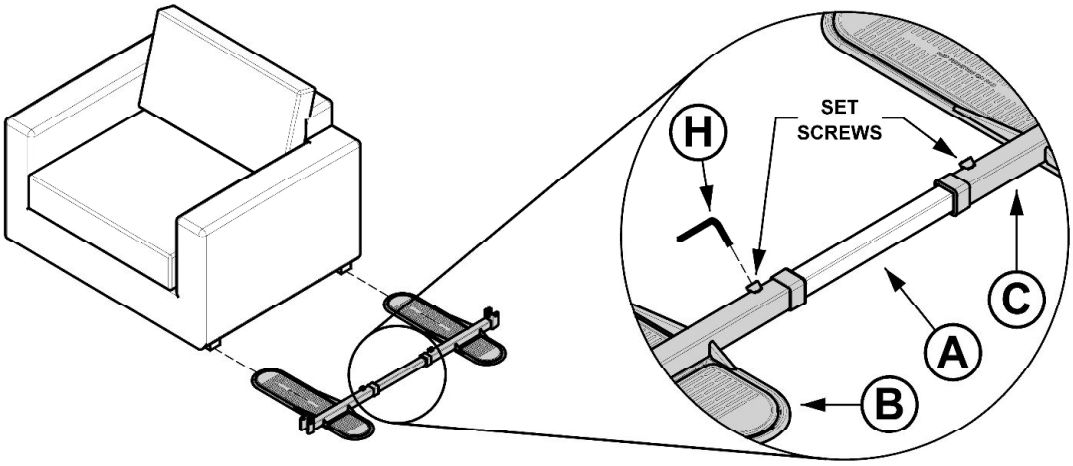

FIGURE 3

4. Slide Plastic Cover **F** over Upright **D**. With Plastic Cover **F** held up, align bolt holes on Upright **D** with Front Foot **B**. Insert Bolts **K** (2x) through Washers **L** (2x) and Upright **D** and thread into Front Foot **B** and tighten with Tool **H** as shown in *FIGURE 4.*

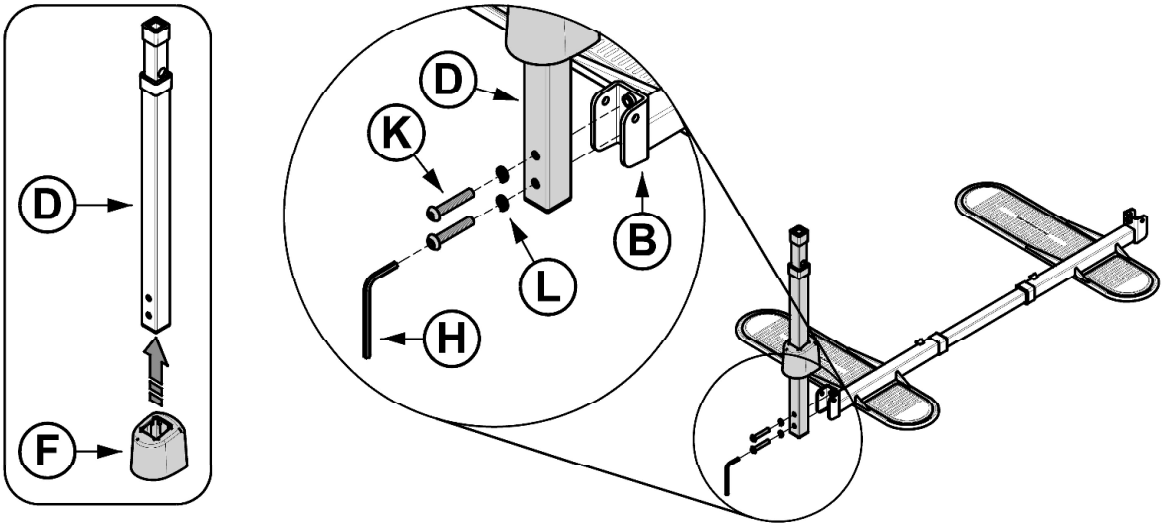

FIGURE 4

5. Snap Rear Cap **G** into place on the side holes of Rear Foot **C** as shown in *FIGURE 5.*

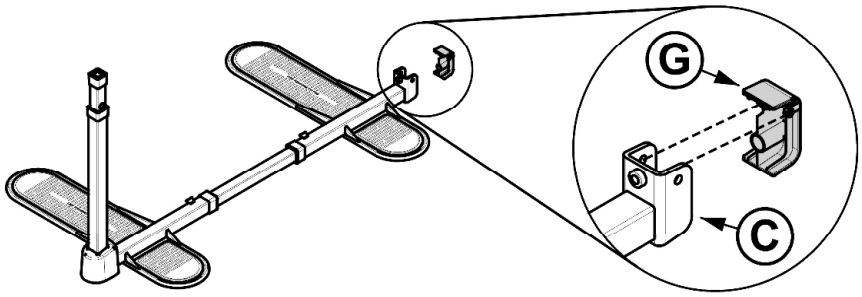

FIGURE 5

6. Place center of furniture feet on pads as shown in *FIGURE 6.*
WARNING: Feet **B** and **C** MUST be firmly secured under heavy furniture at all times.

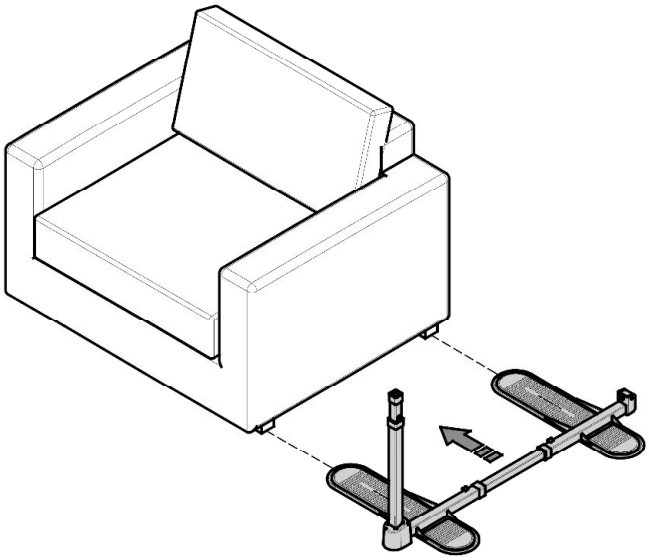

FIGURE 6

7. Insert Handle **E** into Upright in desired orientation. Secure with Bolts **M** and **N** and tighten with Tool **J** as shown in *FIGURE 7*.
WARNING: Ensure that Handle and Upright do not interfere with the movement of lift chairs and recliners.

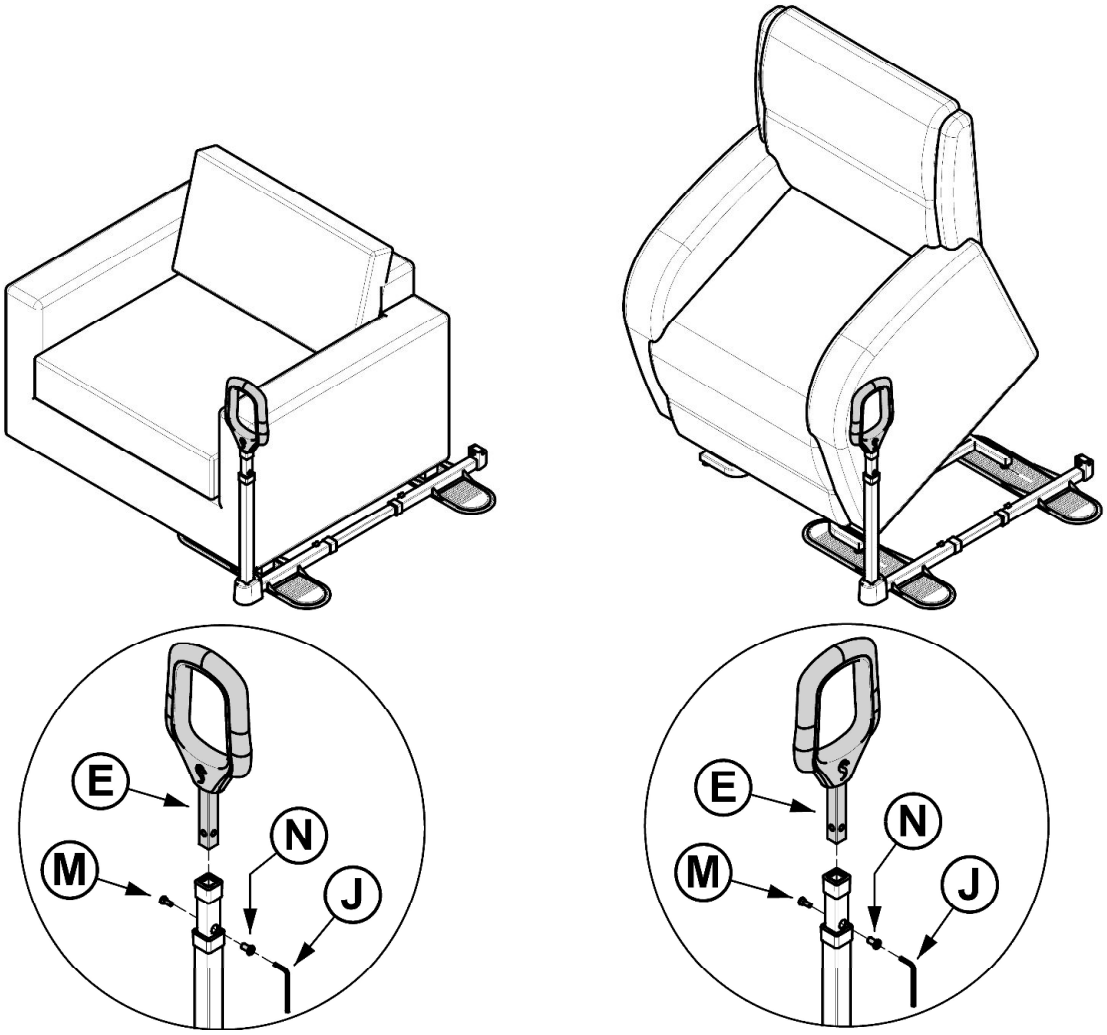

FIGURE 7

8. Depress SPRING BUTTON and expand upright **D** to desired height as shown in *FIGURE 8*. Tighten SET SCREW with Tool **H** to secure.

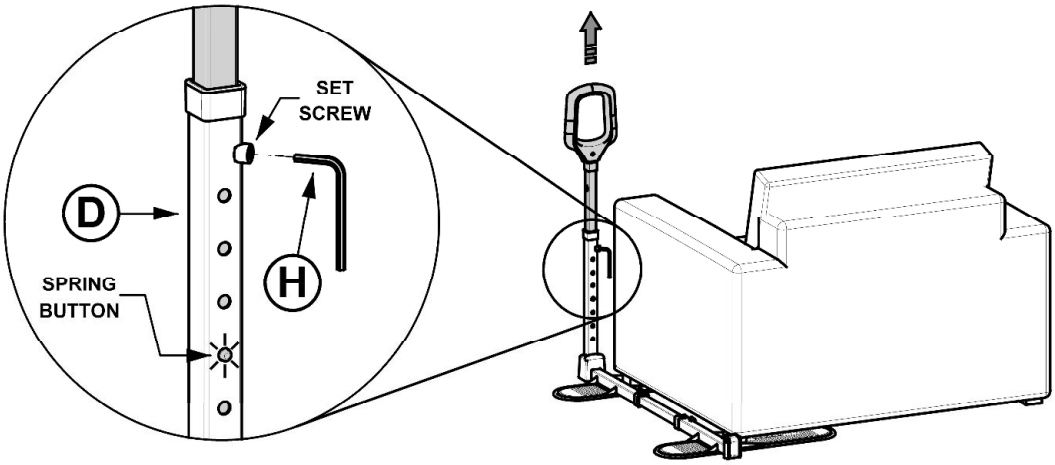

FIGURE 8