Everest & Jennings® by graham-field

TRAVELER L3 PLUS MANUAL WHEELCHAIR MODELS 3F012/3F013/3F014 USER MANUAL

SAVE THIS MANUAL FOR FUTURE USE.

EJ_Traveler_XVI-INS-LAB-RevE24

CONTENTS

1 INTRODUCTION 3

2 IMPORTANT SAFETY PRECAUTIONS 4
WARNINGS 4

3 GETTING STARTED — GENERAL OPERATION GUIDELINES 6
TRAVELER L3 PLUS COMPONENT IDENTIFICATION 6
OPERATING THE WHEEL LOCKS 6
UNFOLDING AND FOLDING THE WHEELCHAIR 6
UNFOLDING THE WHEELCHAIR 7
FOLDING THE WHEELCHAIR 7

4 HANDLING TIPS 9
BALANCE 9
TRANSFER 9
REACHING / BENDING 10
REACHING / BENDING FORWARD OR SIDEWARD 10
REACHING / BENDING BACKWARD 10
RAMPS AND INCLINES 11
ASCENT 11
DESCENT 11
CURBS 11
CURBS — WITH ATTENDANT 12
STAIRS AND ESCALATORS 12
WEIGHT TRAINING 12

5 ADJUSTMENTS 13
REAR WHEELS, CASTERS, AND ANTI-TIPPERS 13
ARMS 14
ARM—FIXED-HEIGHT, REMOVABLE, FLIP-BACK 14
ARM—ADJUSTABLE-HEIGHT, FLIP-BACK (OPTIONAL) 14
FRONT RIGGING 15
FOOTREST—DETACHABLE, SWINGAWAY 15
REMOVE FOOTREST 15
ATTACH FOOTREST 15
ADJUST FOOTPLATE EXTENSION LENGTH 15
ELEVATING LEGREST—DETACHABLE, SWINGAWAY 16
REMOVE ELEVATING LEGREST 16
ATTACH ELEVATING LEGREST 16
ADJUST LEGREST ELEVATION 16
ADJUST ELEVATING LEGREST PANEL POSITION 17
ADJUST LEGREST FOOTPLATE EXTENSION LENGTH 17
CROSSBRACES 17
TIGHTEN CROSSBRACES 17
WHEEL LOCKS 18
ADJUST WHEEL LOCKS 18

6 TRANSPORTING OR STORING THE TRAVELER L3 PLUS 19
PREPARATION FOR TRANSPORT / FOLDING THE WHEELCHAIR 19
TRANSPORTING THE WHEELCHAIR 19

7 MAINTENANCE 21
SERVICE MANUAL 21
DO-IT-YOURSELF MAINTENANCE 21
LIST OF TOOLS 22
GENERAL CARE 22
CHECK TIRE WEAR 22
CHECK HANDRIMS 22
CHECK WHEEL LOCK ENGAGEMENT 22
CHECK ANTI-TIPPERS 22
CHECK HANDGRIPS 22
CHECK UPHOLSTERY 23
CHECK REAR WHEEL ADJUSTMENT 23
CHECK ARMS 23
CHECK BACKPOSTS / PUSH HANDLES 23
CHECK FOOTRESTS & ELEVATING LEGRESTS 23
CLEANING YOUR TRAVELER L3 PLUS 23
CHECK CASTERS 24
CHECK WHEEL BEARINGS 24

8 TROUBLESHOOTING 25

9 LIMITED WARRANTY 26

10 INDEX 27

1 INTRODUCTION

Important safety, operating, and maintenance instructions that warrant your attention are included in this user manual. Read the entire manual carefully before operating your new wheelchair, and refer to it as often as necessary to help maintain good performance standards.

Consult your healthcare professional and GF authorized distributor for assistance in developing and learning safe and effective techniques for performing your daily activities according to your individual physical abilities and needs, and to make certain that your wheelchair is properly prescribed and adjusted for your use.

The safety precautions in this manual are general warnings intended to be used only as basic guidelines. You may find it necessary to develop your own methods for safely solving frequently encountered challenges. Again, consult your professional medical advisors for their recommendations about safety methods, and never hesitate to ask for their assistance.

Your wheelchair should receive frequent, regularly scheduled maintenance, including an inspection of the mechanical parts, to ensure proper operation. Some suggested inspection procedures, troubleshooting procedures, and adjustment procedures are included in this manual. When it comes to service and repair, remember that your GF authorized distributor knows your wheelchair best.

Thank you for choosing an Everest & Jennings product. The Traveler L3 Plus is a manual, folding, lightweight wheelchair, suitable for frequent users who require a lightweight, portable wheelchair, fitted to their anatomy, without the need of customization or alteration to the center of gravity. The Traveler L3 Plus is intended for indoor and/or outdoor use.

The person performing adjustments on the Traveler L3 Plus has the responsibility of making certain that the user can safely operate the wheelchair with the adjustments selected. This person must evaluate the user's ability, weight, physical condition, the environment in which the wheelchair will be used, and the terrain over which the wheelchair will travel. We recommend the use of anti-tippers at all times.

⚠ **WARNING: When wheelchair is in use, anti-tippers must be installed in the downward position.**

Note the following special statements, used throughout this manual, and their significance:

⚠ **WARNING: Indicates a potential hazard situation or unsafe practice that, if not avoided, could result in death or serious personal injury.**

⚠ **CAUTION: Indicates a potential hazard situation or unsafe practice that, if not avoided, could result in minor or moderate personal injury.**

▲ **NOTICE: Indicates a potential hazard situation or unsafe practice that, if not avoided, could result in product or property damage.**

Info: Provides application recommendations or other useful information to ensure that you get the most from your product.

2 IMPORTANT SAFETY PRECAUTIONS

IMPORTANT SAFETY PRECAUTIONS: ALWAYS FOLLOW THESE SAFETY PRECAUTIONS WHEN USING YOUR WHEELCHAIR. FAILURE TO DO SO COULD RESULT IN PERSONAL INJURY TO YOU OR OTHERS OR DAMAGE TO YOUR WHEELCHAIR.

Safety requires the constant attention of the wheelchair user and the attendant. It is extremely important to learn and always use safe methods of performing basic daily activities. Always consult your healthcare professional to determine those methods most suitable for your individual abilities.

Protect yourself and your wheelchair by having your Traveler L3 Plus serviced regularly. Whenever any part of your Traveler L3 Plus is not functioning properly, contact your GF authorized distributor immediately, as a hazardous situation could result, causing personal injury or damage to your wheelchair. **ONLY EXCELLENT CONDITION IS ACCEPTABLE WHERE SAFETY IS CONCERNED**. Periodic inspection, adjustment, and replacement of worn parts will provide many years of superb performance.

WARNINGS

⚠ **WARNING: Traveler L3 Plus maximum weight capacity is 300 lb (136 kg), EVENLY DISTRIBUTED.**

⚠ **WARNING: DO NOT operate this wheelchair on streets or roadways.**

⚠ **WARNING: DO NOT operate this wheelchair on hilly or rough terrain, sand, wet or icy surfaces, or surfaces with impaired traction. Ensure that pathway is clear of all obstacles.**

⚠ **WARNING: DO NOT turn wheelchair while going downhill, as wheelchair could tip over.**

⚠ **WARNING: DO NOT attempt inclines without anti-tippers installed in the downward position. DO NOT attempt any incline or decline greater than six degrees (10% grade, or one foot of rise or fall per ten feet of ramp length).**

⚠ **WARNING: This wheelchair does not offer seating or occupant restraint equivalent to the seat provided in a motor vehicle! To increase your safety while traveling in a motor vehicle, always transfer to the vehicle seat and use the restraint provided by the vehicle manufacturer.**

⚠ **WARNING: DO NOT tie down or attach anything to the wheels. This could cause tipping and possibly result in injury or damage to the wheelchair.**

⚠ **WARNING: The footplates' lowest point should clear the ground by at least 2 1/2 inches, to permit proper clearance of potential obstruction.**

⚠ **WARNING: Doing a “wheelie” (tilting the wheelchair backward until it reaches its balance point) is dangerous and could result in personal injury to the user.**

⚠ **WARNING: DO NOT stand or step on the footplates while transferring to or from your wheelchair. This could cause the wheelchair to tip or may cause personal injury or damage to your wheelchair.**

⚠ **WARNING: DO NOT place your hands between seat rail and side panel.**

⚠ **WARNING: ALWAYS engage wheel locks before transferring, using a wheelchair lift or using an elevator.**

⚠ **WARNING: Ensure that wheelchair is on a stable, level surface and engage wheel locks before and during transfer.**

⚠ **WARNING: Operate ONLY with anti-tippers in place when leaning or tipping. When wheelchair is in use, anti-tippers MUST be installed in the downward position.**

⚠ **WARNING: DO NOT lean over the top of the wheelchair back. This could cause the wheelchair to tip over.**

⚠ **WARNING: To reduce the risk of tipping before leaning or reaching forward, sit back in the seat and rotate casters fully toward front of wheelchair.**

⚠ **WARNING: Unauthorized modification or the use of non-Everest & Jennings replacement parts could change the structure of the wheelchair, void the warranty, and create a hazardous condition resulting in serious personal injury.**

⚠ **WARNING: DO NOT lean on this wheelchair or use it as a walker, these are practices which could result in loss of balance and personal injury.**

⚠ **WARNING: DO NOT use your wheelchair on escalators.**

⚠ **WARNING: Wheel locks are not brakes. DO NOT use the wheel locks to slow down your wheelchair, or while the wheelchair is moving. Wheel locks are only intended to keep the wheelchair in place when it is at a complete stop.**

⚠ **WARNING: GF Health Products, Inc. specifically disclaims responsibility for any personal injury or property damage which may occur during any use which does not comply with federal, state, or local laws or ordinances.**

3 GETTING STARTED — GENERAL OPERATION GUIDELINES

TRAVELER L3 PLUS COMPONENT IDENTIFICATION

Familiarize yourself with main components, identified in Traveler L3 Plus illustration below.

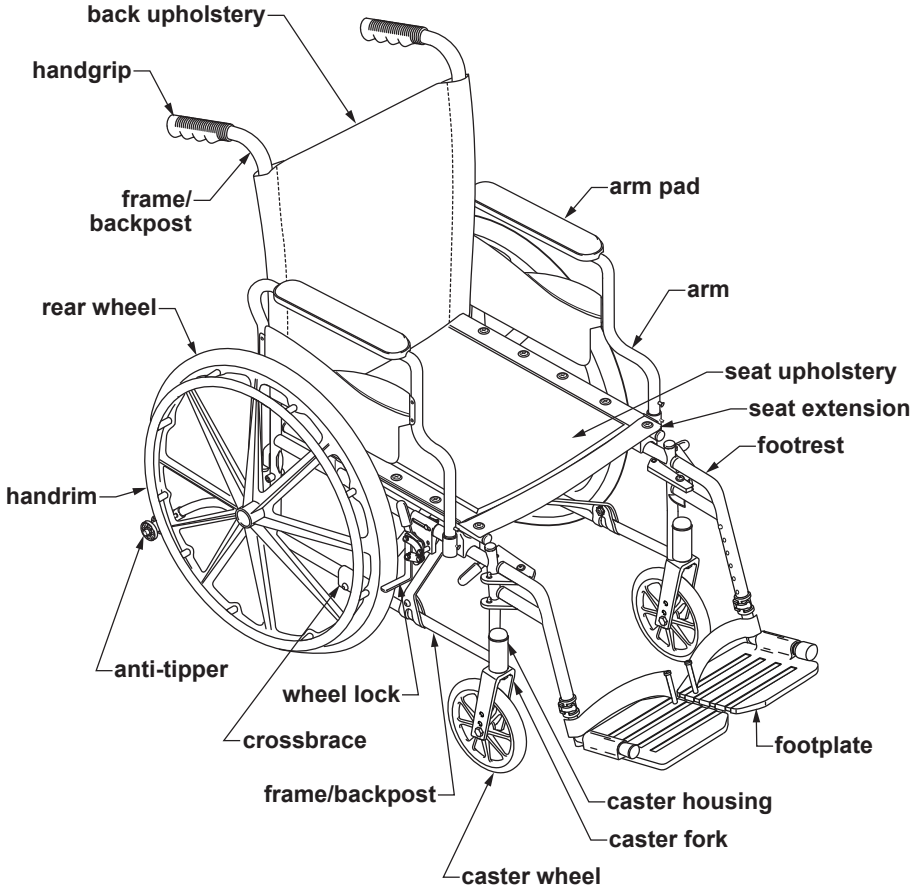

OPERATING THE WHEEL LOCKS

Two wheel locks are located on the Traveler L3 Plus; one on each of the fixed rear wheels. To engage, push the lever forward. Once over center, the lever will lock into place. To disengage, pull back on the lever.

UNFOLDING AND FOLDING THE WHEELCHAIR

⚠ **WARNING: When folding or unfolding the wheelchair, do not place your fingers or hands under the seat rail or between the seat rail and side panel.**

⚠ **WARNING: Read warning label, shown above, located on side panels: Always keep hands clear when unfolding the wheelchair.**

⚠ **WARNING: Do not sit on or transfer into the wheelchair unless it is fully open and the seat rails are fully seated.**

⚠ **WARNING: Do not lift the wheelchair by the arms, footrests or legrests, or any other detachable parts.**

UNFOLDING THE WHEELCHAIR

1. Engage wheel locks on both sides.

2. Use both hands to push down with even pressure on seat tubes and seat upholstery on insides of wheelchair, as shown at above left, until the seat rails are fully seated, as shown at above right. ***DO NOT place any fingers or parts of your hand under the seat rails.***
3. Attach footrests or legrests to wheelchair.
4. Reinstall seat cushion, if so equipped.

⚠ **WARNING: Ensure seat, arms, and footrests or legrests are locked in place before occupying or operating wheelchair.**

FOLDING THE WHEELCHAIR

1. Detach footrests or legrests from wheelchair.
2. Remove seat cushion, if applicable.

3. Grab the seat upholstery at center front and rear with both hands, pull sharply, and lift up as shown above.
4. If necessary, fold the excess seat upholstery over the arm.

5. To fold wheelchair completely, tip it sideways so wheel won't drag and press sides together as shown at above right.

4 HANDLING TIPS

The Everest & Jennings Traveler L3 Plus has been designed and engineered to perform as a stable and well balanced unit when used for its intended purpose. However, it is possible to tip the Traveler L3 Plus over if it is used improperly or if you move beyond the center of gravity. You may want to consider the use of a positioning belt, available from your distributor or www.grahamfield.com, to maintain proper weight distribution. We urge you to learn the characteristics of your wheelchair. It is most important to learn safe methods to perform the daily activities basic to your lifestyle. Consult your medical professionals for assistance in developing the skills and proper techniques to perform all activities safely.

BALANCE

Proper balance is the key to maintaining the stability of your wheelchair. Reaching, bending, and transferring to or from a wheelchair will change your weight distribution and center of gravity. When performing such activities, do so as instructed in the following paragraphs to avoid tipping the wheelchair.

TRANSFER

⚠ **WARNING: ALWAYS ensure the wheelchair is on a stable, level surface before transfer.**

⚠ **WARNING: ALWAYS engage wheel locks before transfer.**

⚠ **WARNING: DO NOT step on the footplates; this could cause the wheelchair to tip. Fold them up, and either detach them, or swing them aside.**

⚠ **WARNING: There is a critical moment when there is little or no seat platform beneath you. Take every precaution to reduce this unsupported distance before you attempt transfer.**

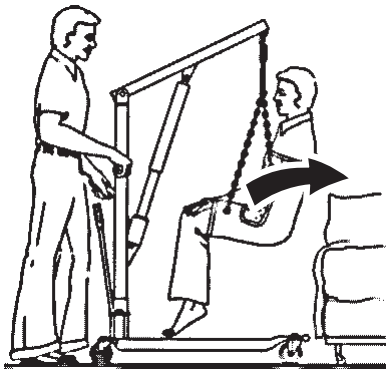

Patient Lift Transfer

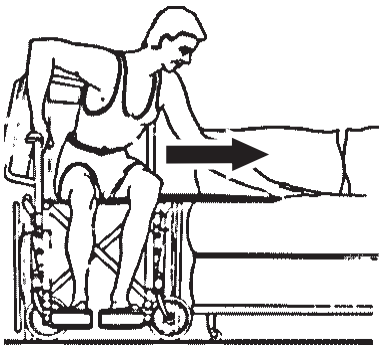

Transfer Board Transfer

Transferring into or out of a wheelchair is a very difficult maneuver; always exercise extreme care even when transferring with the aid of an attendant, a patient lift (shown at above left), or a transfer board (shown at above right). Consult your medical professionals for assistance in developing your individual transfer technique. Engage both wheel locks and ensure the wheelchair is stabilized and will not move or slide during the transfer. Take extra precautions to prevent tipping. Use good body mechanics to prevent personal injury.

REACHING / BENDING

⚠ **WARNING: ALWAYS turn the casters frontward to provide stability while reaching. If in doubt, ask for assistance or use a device that will extend your reach without requiring you to shift your weight.**

Although it is not recommended, you may find it occasionally necessary to lean or reach from your wheelchair. Consult with your healthcare professional for assistance in developing your personal safe reaching or moving techniques suited to your ability and restrictions.

REACHING / BENDING FORWARD OR SIDEWARD

⚠ **WARNING: DO NOT attempt to reach objects if you are required to move forward in the seat. DO NOT attempt to retrieve objects from the floor if you must reach down between your knees. DO NOT shift your weight in the direction that you are reaching and/or bending; this could cause the wheelchair to tip.**

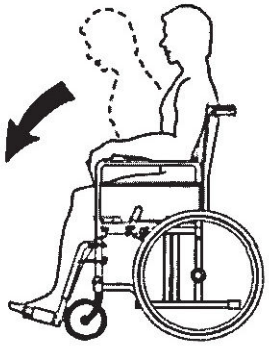

Reach Forward

Reach Sideward

1. Maneuver the wheelchair as close as possible to the object you wish to reach.
2. Rotate both casters fully forward: Go forward, and then back the wheelchair toward the object to swing the casters fully forward.
3. Engage both wheel locks.
4. Ensure the casters are rotated fully forward before reaching. If not, repeat step 2.

REACHING / BENDING BACKWARD

⚠ **WARNING: DO NOT engage the wheel locks while reaching or bending backward. Should your weight suddenly shift accidentally, it is better to roll in that direction than to tip over.**

⚠ **WARNING: DO NOT lean over the back upholstery; this could cause the wheelchair to tip.**

1. Maneuver the wheelchair as close as possible to the object; the rear wheels will limit how close you can get.
2. Rotate both casters fully forward: Go forward, and then back the wheelchair toward the object to swing the casters fully forward.
3. Reach only as far as your arm will extend without changing your sitting position. If in doubt, reposition the wheelchair or ask for assistance.

RAMPS AND INCLINES

⚠ **WARNING: During descent, the footplates' lowest point should be no closer to the ground than 2 1/2 inches to permit proper clearance.**

⚠ **WARNING: DO NOT attempt inclines without anti-tippers installed. DO NOT attempt any incline or decline of more than 6 degrees (10% grade, or one foot of rise or fall per ten feet of ramp length).**

⚠ **WARNING: DO NOT use wheel locks to slow your descent. Attempting to use wheel locks is likely to result in accidental locking that could cause the wheelchair to stop abruptly, suddenly pitch forward, or tip sideways.**

⚠ **WARNING: Avoid changing direction while descending a ramp or incline, as this could cause instability.**

Most people are capable of negotiating short inclines without assistance, depending upon upper body strength, endurance, and the degree of incline. Know your own strength and endurance capabilities and limitations before attempting to negotiate an incline or decline. Practice with an attendant or healthcare professional first before attempting any inclines, declines curbs or ramps. Always inspect the ramp for hazards such as holes, slippery or uneven surfaces, etc. before starting up or down. If you can not see the entire ramp, ask someone to inspect it for you.

ASCENT

Lean the upper part of your body slightly forward, as shown above, as you ascend the incline. If it becomes necessary to stop on the incline, avoid any abrupt or sudden forward movement as you resume climbing; this could cause tipping.

DESCENT

Always face forward when going down a ramp, but do not lean forward; this could cause tipping. Lean slightly backward to increase stability. It is critical to keep the wheelchair under control at all times. Descent should be made slowly and safely by grasping the handrims; however, use care, as friction heat will be generated. We recommend the use of gloves to reduce the effects of friction heat, but going slower is a better alternative.

CURBS

Curbs should only be negotiated with the assistance of an attendant. When you encounter curbs, find a way around, or use the ramps now available in most locations. If there is no ramp available, avoid the curb by using the disabled-designated elevators now required in most locations.

CURBS — WITH ATTENDANT

Going up (Method 1)

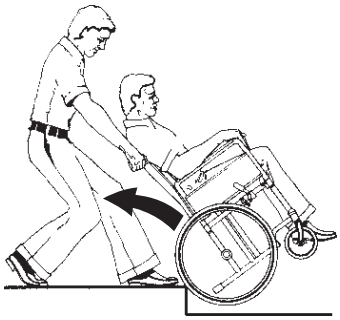

Going Up (Method 2)

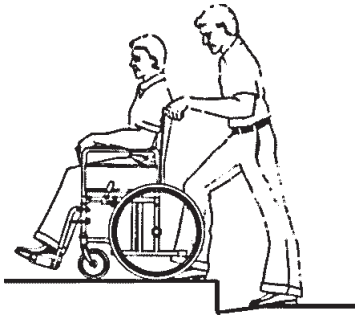

(Going Down)

⚠ **WARNING: When approaching a curb, ensure the hand grips are securely fastened and do not turn or slip off.**

Curbs should only be negotiated with the assistance of an attendant. The following are ***suggestions only*** for curb negotiation. It is important for you to develop your own safe technique that is best suited for your abilities with the aid of your healthcare professionals.

Going Up (Method 1)

When approaching a curb, ensure the hand grips are securely fastened and do not turn or slip off. Tilt the wheelchair backward to its balance point and move forward until the front casters pass over the top of the curb. Lower the front casters slowly onto the curb while lifting the wheelchair by the push handles, and push forward until the rear wheels roll up and over the curb. Ensure the wheelchair has completely cleared the curb and can not roll backwards.

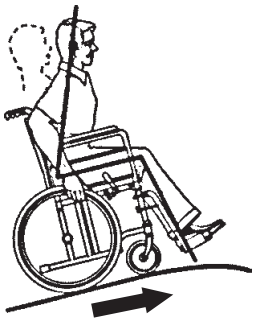

Ascent

Going Up (Method 2)

Ensure the hand grips are securely fastened and do not turn or slip off. Turn the wheelchair around and back up until the rear wheels are against the curb. Tilt the wheelchair back to its balance point and lift up by the push handles while pulling the wheelchair up and over the curb. DO NOT let the front casters down until the wheelchair is back far enough to clear the curb.

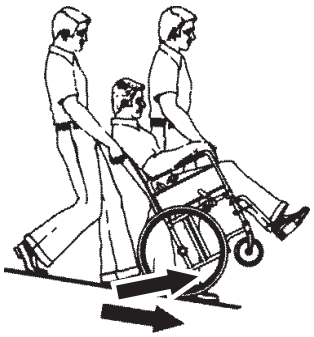

Descent

Going Down

Ensure the hand grips are securely fastened and do not turn or slip off. While standing behind the wheelchair, turn the wheelchair around and carefully back down the step. Hold the handgrips tightly and pull the wheelchair to where the rear wheels reach the curb edge, then slowly roll the rear wheels down onto the lower level. After the wheels are safely on the lower level, tilt the wheelchair back to its balance position and turn it face forward. Lower the front casters carefully by placing one foot on the tipping lever and gradually decreasing the force of exertion.

STAIRS AND ESCALATORS

⚠ **WARNING: Never attempt to negotiate stairs or escalators in your Traveler L3 Plus.**

Stairs and escalators are dangerous obstacles. If you encounter steps and there is no ramp available, avoid the steps by utilizing the disabled designated elevators now required in most locations.

WEIGHT TRAINING

⚠ **WARNING: This wheelchair is NOT designed or tested as a seat for weight training.**

5 ADJUSTMENTS

The Traveler L3 Plus offers several adjustments to make it easier and more comfortable to drive. Section 7, MAINTENANCE, offers preventive maintenance suggestions for keeping your wheelchair in excellent condition; ensure that all components are in excellent condition before adjusting. The following are recommended methods; after a few adjustments, you may develop your own. Always consult your GF authorized distributor for assistance.

The person performing adjustments on the Traveler L3 Plus has the responsibility of making certain that the user can safely operate the wheelchair with the adjustments selected. This person must evaluate the user's ability, weight, physical condition, the environment in which the wheelchair will be used, and the terrain over which the wheelchair will travel.

All adjustments and their page locations are referenced in the index at the end of this manual. Specific tools needed to perform each adjustment are identified in adjustment directions. A complete list of tools needed to perform all adjustments in this section follows:

Phillips screwdriver
Two 5/8" wrenches
M13 wrench
M11 wrench
M6 hex key

REAR WHEELS, CASTERS, AND ANTI-TIPPERS

Rear wheels, casters, and anti-tippers are grouped because rear axle mounting position determines caster axle mounting position and anti-tipper adjustment height. Using the correct combination of rear axle and caster mounting positions maintains the correct alignment of the wheelchair.

We recommend that you do not replace or adjust rear wheel, caster, or anti-tipper components yourself, since special tools and training are required. Contact your GF authorized distributor when your rear wheels or casters need adjustment.

ARMS

ARM—FIXED-HEIGHT, REMOVABLE, FLIP-BACK

Remove arm

The fixed-height flip-back arm is removable.

1. Depress both front and rear lower arm release pins until they unlock.
2. Hold arm by center of armpad. Lift straight up and off.

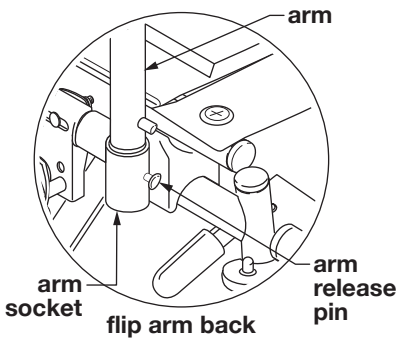

Install arm

Hold arm by center of armpad. Lower arm straight down into sockets and push to lock. Ensure release pins are locked in place.

⚠ **WARNING: Ensure arm is locked into place before occupying or operating wheelchair.**

Flip arm back

1. Depress locking pin and lift front of arm up out of socket.
2. Swing arm up and back.

Lock arm

Push front of arm down into socket until it locks into place.

⚠ **WARNING: Ensure arm is locked in place BEFORE occupying or operating wheelchair.**

ARM—ADJUSTABLE-HEIGHT, FLIP-BACK (OPTIONAL)

Adjust arm height

If your Traveler L3 Plus arm is equipped with an upper arm release as shown at right, your arm height is adjustable. Arm height is adjusted by engaging the upper arm release in one of several predrilled holes. To adjust:

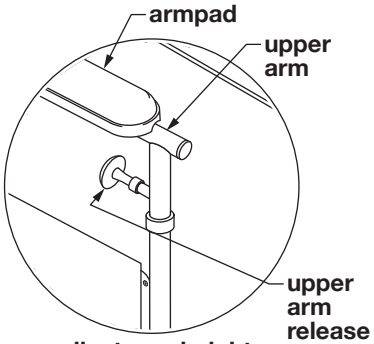

adjust arm height

1. Pull upper arm release until it unlocks, freeing upper arm to move up and down. To keep in unlocked position while adjusting arm height, turn the release knob 90 degrees.
2. Holding upper arm by center of armpad, slide upper arm up or down to desired height. Ensure both front and back of armpad are at the same height.
3. Rotate release knob back to former position and ensure it locks into one of the adjustment holes. To ensure upper arm is securely locked, move arm up and down; if no movement occurs, arm is properly locked into place; if not, readjust until locked.

⚠ **WARNING: Ensure upper arm is locked into place <u>in level position</u> BEFORE occupying or operating wheelchair.**

Flip arm back

1. Press bottom of latch, shown at right, against arm and lift front of arm up out of socket.
2. Swing arm up and back.

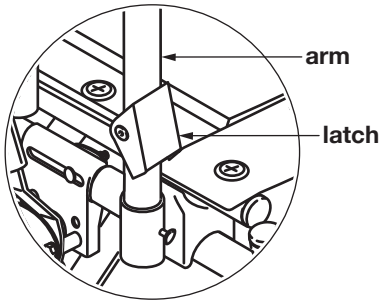

flip arm back

Lock arm

Push front of arm down into socket until it locks into place.

⚠ **WARNING: Ensure arm is locked into place BEFORE occupying or operating wheelchair.**

FOOTREST—DETACHABLE, SWINGAWAY

⚠ **WARNING: The footplates' lowest point should be no closer to the ground than 2 1/2 inches, to permit proper clearance.**

⚠ **WARNING: DO NOT stand on the footplates; this could cause the wheelchair to tip.**

REMOVE FOOTREST

1. To release lock, pull swingaway release lever forward, toward front of wheelchair. Footrest will swing outward.
2. To remove, lift footrest straight up off wheelchair hinge pins.

ATTACH FOOTREST

1. Set footrest on wheelchair (so that footrest hinge plates engage wheelchair hinge pins).
2. Swing footrest inward.
3. Ensure that swingaway release lever is locked in a rearward position, toward back of wheelchair.

⚠ **WARNING: Ensure footrests are locked in place BEFORE occupying or operating wheelchair.**

ADJUST FOOTPLATE EXTENSION LENGTH

1. See picture at right.

   Loosen latch to free footplate extension inside hanger.
2. Press down on the locking button and adjust the footplate to the desired length. Ensure that the locking button is completely extended and securely fastened in the adjustment hole.
3. Fasten latch to secure footplate extension inside hanger.
4. Repeat steps 1-3 for the other footplate extension.
5. Ensure both footplate extensions are securely fastened and minimum ground clearance is 2 1/2 inches.

⚠ **WARNING: Ensure footplates are securely fastened BEFORE occupying or operating wheelchair.**

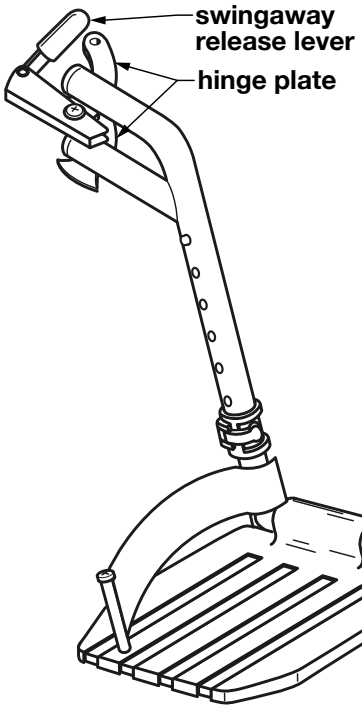

remove footrest (left shown)

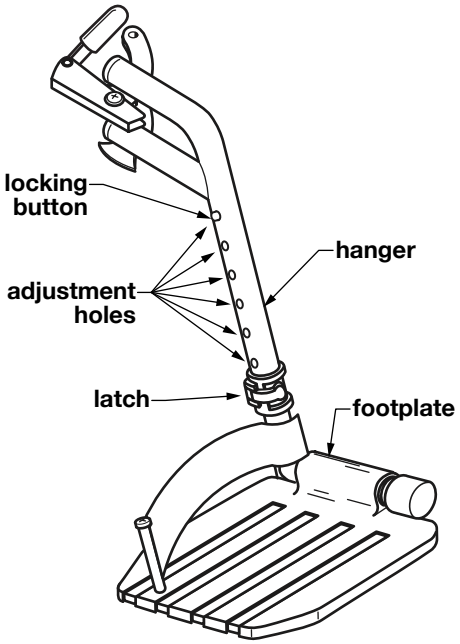

footplate extension, adjust length

ELEVATING LEGREST—DETACHABLE, SWINGAWAY

⚠ **WARNING: The footplates' lowest point should be no closer to the ground than 2 1/2 inches, to permit proper clearance.**

⚠ **WARNING: DO NOT stand on the footplates; this could cause the wheelchair to tip.**

REMOVE ELEVATING LEGREST

1. To release lock, pull swingaway release lever forward, toward front of wheelchair. Legrest will swing outward.
2. To remove, lift legrest straight up off wheelchair hinge pins.

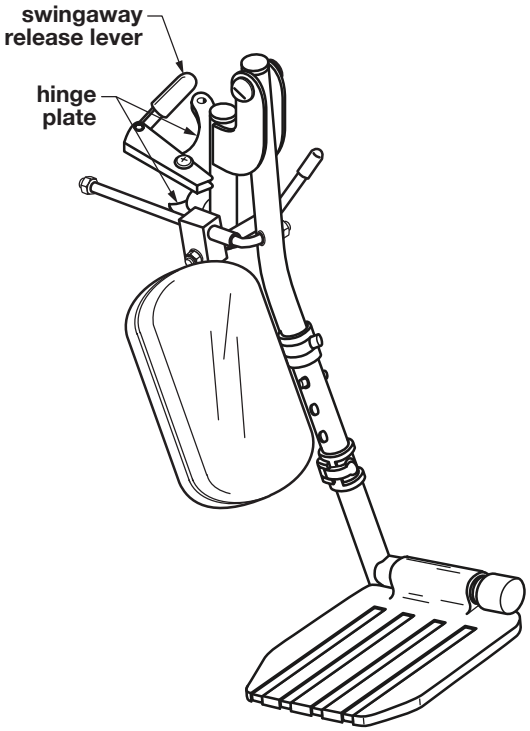

remove elevating legrest

ATTACH ELEVATING LEGREST

1. Set legrest on wheelchair (so that legrest hinge plates engage wheelchair hinge pins).
2. Swing legrest inward.
3. Ensure legrest is locked in place and swingaway release lever is locked in a rearward position, toward back of wheelchair.

⚠ **WARNING: Ensure legrests are locked in place BEFORE occupying or operating wheelchair.**

ADJUST LEGREST ELEVATION

⚠ **CAUTION: It is possible to RAISE the elevating legrest without moving the legrest release lever. As a safety feature, however, in order to LOWER the elevating legrest you MUST move the legrest release lever. This is to prevent the legrest from accidentally dropping while the user's leg is elevated.**

⚠ **WARNING: Ensure elevating legrests are locked in place BEFORE occupying or operating wheelchair.**

Raise elevating legrest

Slowly rotate the legrest up to the desired position. Ensure elevating legrest is locked in position.

Lower elevating legrest

1. To allow the elevating legrest to lower without dropping suddenly, support its weight and move the release lever forward.
2. Slowly lower elevating legrest to desired position.
3. Release lever. Ensure elevating legrest is locked in position before letting go of legrest.

ADJUST ELEVATING LEGREST PANEL POSITION

The legrest panel can be rotated up and out of the way. Refer to picture on previous page.

1. To adjust panel, hold the panel and rotate it upward.
2. To return panel to position, hold the panel and rotate downward. The panel will stop at the proper position.

⚠ **WARNING: Ensure that legrest panels are locked in place BEFORE occupying or operating wheelchair.**

ADJUST LEGREST FOOTPLATE EXTENSION LENGTH

See **Adjust footplate extension length** in Footrest—Detachable, Swingaway section.

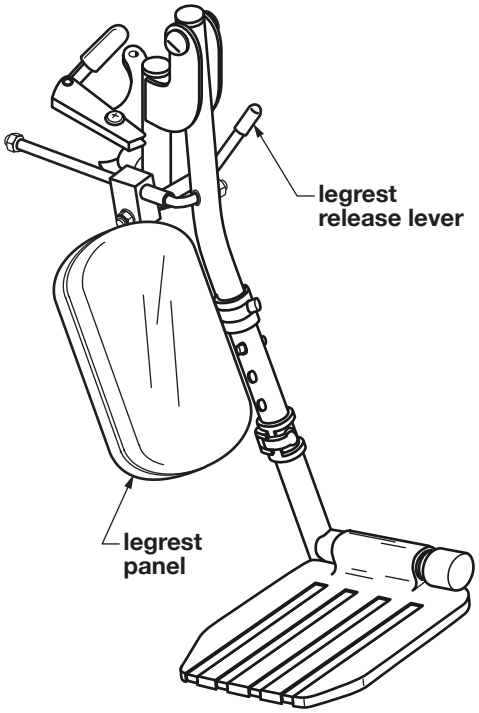

adjust legrest elevation

CROSSBRACES

TIGHTEN CROSSBRACES

M13 wrench, M6 hex key

Check the crossbraces to ensure that the bolt and nut securing both crossbraces in the center of the wheelchair are secure (crossbraces should be loose enough to fold easily, yet snug enough to take up excess play). Use an M13 wrench and M6 hex key to tighten.

WHEEL LOCKS

ADJUST WHEEL LOCKS

M11 wrench

1. Use an M11 wrench to loosen the adjustment bolt until the wheel lock slides on the frame.
2. Place the wheel lock in the locked position and slide it into contact with the tire.
3. Place the wheel lock in the unlocked position and slide it 3/8" closer to the tire.
4. Use an M11 wrench to tighten the adjustment bolt and engage the wheel lock to check the fit. The wheel lock should indent the tire at least 3/8".
5. Repeat steps 1-4 for other wheel lock. Tighten the adjustment bolts securely to eliminate wheel lock movement on frame.

⚠ **WARNING: Ensure wheel locks are adjusted so that they lock in place appropriately BEFORE occupying or operating wheelchair.**

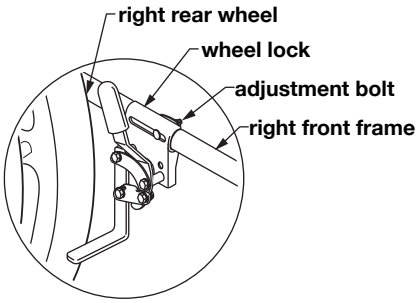

wheel lock
shown unlocked

6 TRANSPORTING OR STORING THE TRAVELER L3 PLUS

⚠ **WARNING: This wheelchair does NOT offer seating or occupant restraint equivalent to the seat provided in a motor vehicle! To increase your safety while traveling in a motor vehicle, ALWAYS transfer to the vehicle seat and use the restraint provided by the vehicle manufacturer.**

PREPARATION FOR TRANSPORT / FOLDING THE WHEELCHAIR

⚠ **WARNING: When folding or unfolding the wheelchair, DO NOT place your fingers or hands under the seat rail or between the seat rail and side panel.**

The Traveler L3 Plus can easily be transported by folding the wheelchair:

1. Detach footrests or legrests from wheelchair.
2. Remove the seat cushion, if so equipped.

3. Grab the seat upholstery at center front and rear with both hands, pull sharply, and lift up as shown at above left.
4. If necessary, fold the excess seat upholstery over the arm.
5. To fold wheelchair completely, tip it sideways so wheel won't drag and press sides together as shown at above right.

TRANSPORTING THE WHEELCHAIR

When transporting the wheelchair in a motor vehicle, do not place the wheelchair where it will interfere with the safe operation of the vehicle or endanger the driver or passengers. The front seat IS NOT a good location to store a wheelchair during transport — it can be dislodged and become a serious hazard to the driver. Always take precautions to avoid personal injury when loading or lifting a wheelchair into or out of a vehicle.

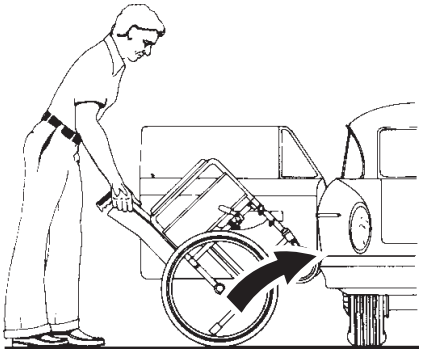

Lifting Wheelchair into Rear Seat or Trunk

Rear Seat: Move the front seat as far forward as possible. Fold the wheelchair as described on previous page and face it toward the open car door. Tilt the wheelchair backwards as shown above and roll it forward on the rear wheels. Push the wheelchair forward so the casters enter the car. Tilt the wheelchair away from the back of the front seat, then lower the casters to the floorboard. Slowly lift-roll the chair into the car.

⚠ **WARNING: Ensure the wheelchair is stable and will not shift while the car is in motion.**

⚠ **WARNING: Ensure the wheelchair does NOT block the driver's field of vision.**

Trunk: Fold the wheelchair as described on previous page and set the wheel locks. Grasp the front of the frame and rear of the wheels and lift the wheelchair carefully, using good body mechanics to avoid injury, and place it in the trunk.

⚠ **WARNING: DO NOT put any articles on top of the wheelchair.**

Close the trunk lid slowly.

7 MAINTENANCE

Protect your E&J Traveler L3 Plus by having it serviced regularly. Proper care and maintenance are essential to keep your wheelchair in safe working condition. Periodic inspection, adjustment, and replacement of worn parts will provide many years of superb performance. When you believe that a component or part of your Traveler L3 Plus is not functioning properly, contact your GF authorized distributor immediately, as a potentially hazardous condition could result. Only excellent condition is acceptable where safety is concerned.

SERVICE MANUAL

There is no service manual for the Traveler L3 Plus. Contact your GF authorized distributor with service questions not answered by this manual.

Info: We recommend that you have a GF authorized distributor perform a six month maintenance check, as the distributor may find and correct a problem which might otherwise go undetected and eventually cause more serious problems and/or personal injury.

DO-IT-YOURSELF MAINTENANCE

You can do many of the scheduled maintenance tasks yourself, if you have mechanical ability and a few basic tools. Refer to the maintenance schedule on the next page for the recommended regularity of each procedure. If any maintenance procedure is not clear to you, ask your GF authorized distributor for assistance.

▲ **NOTICE: Improper maintenance can cause operating problems and may affect your warranty.**

⚠ **WARNING: Unauthorized modification or the use of non-Everest & Jennings replacement parts could change the structure of the wheelchair, void the warranty, and create a hazardous condition resulting in serious personal injury.**

MAINTENANCE SCHEDULE				
Procedure	Perform at least every			
	Week	Month	3 Months	6 Months
Check tire wear	✔			
Check handrims	✔			
Check wheel lock engagement	✔			
Check anti-tippers (optional)	✔			
Wipe off frame with soft cloth	✔			
Check handgrips		✔		
Check upholstery		✔		
Check rear wheel adjustment		✔		
Check arms		✔		
Check backposts / push handles		✔		
Check footrests / elevating legrests		✔		
Clean frame			✔	
Check caster stem rotation			✔	
GF distributor maintenance check				✔
Check rear wheel bearings (distributor)				✔
Check caster bearings (distributor)				✔

LIST OF TOOLS

The tools and cleaning supplies listed will assist in the procedures outlined in Section 7.

30 weight oil (available at most auto parts stores)
Phillips screwdriver
soft cloth
mild soap and water solution

GENERAL CARE

Always evaluate the overall operation of your wheelchair. It should function with ease and should travel straight without excessive drag or pull to one side.

Remember, your GF authorized distributor knows your wheelchair best when it comes to service and repairs. Contact your distributor with any questions or concerns regarding the safe operation and maintenance of your wheelchair. Regular maintenance is essential for your safety and continued operation of your wheelchair.

CHECK TIRE WEAR

Examine tires at least once a week for surface wear and cracks and replace them as needed. Replace polyurethane tires when they become loose on the rims or cracks appear.

CHECK HANDRIMS

Check handrims at least once a week. Inspect each handrim for rough or sharp edges and, if any are found, replace handrims immediately. Ensure that all hardware is properly aligned and secure.

CHECK WHEEL LOCK ENGAGEMENT

Check wheel lock engagement at least once a week. See **Adjust wheel locks** in Section 5 to adjust wheel lock engagement. If a wheel lock is worn or damaged, replace it immediately. Inspect the hardware for looseness or signs of wear.

Ensure the locking mechanism operates smoothly. The locking assembly should be tight enough so that the wheel can not rotate or the lock slip. Check that the locking shoe does not press against the tire when in the unlocked position. Excessive force should not be required to either engage or release wheel locks. Oil the wheel lock pivot points with one or two drops of 30 weight oil. Remove excess oil and dirt.

CHECK ANTI-TIPPERS

Check the anti-tippers at least once a week. Ensure that the anti-tippers are securely fastened and properly positioned.

⚠ **WARNING: When wheelchair is in use, anti-tippers must be installed in the downward position.**

CHECK HANDGRIPS

Check handgrips at least once a week. Ensure they are not ripped; ensure they are tight and securely fastened.

CHECK UPHOLSTERY

Check upholstery at least once a month. Inspect for rips, tears and worn spots. Ensure that all upholstery-attaching screws are present, properly aligned, and well-secured. Use a Phillips screwdriver to tighten upholstery mounting screws. Check attaching screws for sharp edges or stripped screws, and replace if found.

⚠ **WARNING: Worn or torn upholstery, or upholstery with loose hardware, must be replaced immediately. It may not support body weight.**

CHECK REAR WHEEL ADJUSTMENT

Inspect the wheels at least once a month. Check alignment by elevating the rear of the wheelchair on a stable object until the rear wheels clear the ground, or placing the wheelchair upside down in a stable position such that the wheels can spin freely. Spin the wheels; there should be no wobble or side-play, and the wheels should spin freely without binding. The bearings should be clean and rotate smoothly. Check rim side-play to verify that bearings are not too loose. If there is a problem, contact your GF authorized distributor. If adjustment is required, this should be done by your distributor only.

CHECK ARMS

Check arms at least once a month. Inspect for sharp edges or cracks which could weaken the arm, and replace if found. Ensure all attaching screws are present and tight. Use a Phillips screwdriver to tighten armpad mounting screws. Check for burrs on the screw heads and replace if found. Ensure that screws do not extend into the padding. Confirm that posts at base of arm fit correctly in the sockets, snug but not binding. Adjustable height arms: Confirm fit in the upper telescoping portion, verify positive locking at each arm height position, and confirm operation of upper arm release.

CHECK BACKPOSTS / PUSH HANDLES

Check backposts at least once a month. Ensure that all mounting hardware is securely fastened and that the backposts are not bent or damaged. Contact your GF authorized distributor if you observe cracking or peeling paint or plating.

CHECK FOOTRESTS & ELEVATING LEGRESTS

Check footrests and legrests at least once a month. Inspect the locking mechanisms to confirm sure fit. Check for cracks, burrs, or sharp edges, and replace if found. Ensure that the footrest or legrest will automatically lock securely in place and will not accidentally unlock. If equipped with heel loops, ensure the anchor bolts are tight and secure.

CLEANING YOUR TRAVELER L3 PLUS

Wipe off the frame frequently, at least once a week, using a soft cloth. Dry the wheelchair immediately if exposed to moisture. Clean the frame every three months with a mild soap and water solution. The frame does not need to be waxed. Do not use solvents, abrasive waxes, caustic chemicals or spray silicone. Never use abrasive cleansers; they could scratch the finish. Never use steam or high pressure cleaners. Clean upholstery and plastic components at least once a month with a mild soap and water solution.

CHECK CASTERS

Check the caster stems for proper rotation at least every three months. The caster fork must swivel freely to facilitate steering and handling. Adjusting the stem nut varies the amount of force required to turn the caster. If the nut is too loose, the caster will flutter or shimmy; if the nut is too tight, the wheelchair will be difficult to steer. If the caster stem requires adjustment, or the stem bearings require replacement, contact your GF authorized distributor. Ensure that stems are firmly attached to forks, and that forks and stems are not bent. Evaluate all threads, locking nuts and bearings.

CHECK WHEEL BEARINGS

Have your GF authorized distributor check caster and rear wheel axle bearings at least every six months.

8 TROUBLESHOOTING

Continual use of your Traveler L3 Plus necessitates maintenance, especially if the factory-set adjustments have been altered. The following troubleshooting guide lists several common problems that may occur, and offers corrective actions for each. If you are unsure of the solution or unable to diagnose the problem, do not hesitate to ask your GF authorized distributor for assistance.

SYMPTOM						
looseness in wheelchair	squeaks / rattles	caster flutter	sluggish turning	chair veers left	chair veers right	**PROBABLE CAUSE AND CORRECTIVE ACTION**
✓	✓	✓	✓			Nuts and / or bolts may be loose. If so, tighten. Bolts should be snug.
		✓	✓	✓	✓	Rear wheels and / or casters may be adjusted improperly. Ensure that both rear wheels are mounted in identical positions, and that casters are mounted in identical positions.
		✓	✓	✓	✓	Caster stem(s) may be adjusted improperly. See distributor to correct adjustment.

Info: Use only Everest & Jennings replacement parts. A Traveler L3 Plus parts catalog is available at www.grahamfield.com to assist in the ordering of parts.

⚠ **CAUTION: A complete inspection of your wheelchair, including maintenance, servicing and safety checks, should be performed by a GF authorized distributor at least every six months.**

⚠ **WARNING: Unauthorized modification or the use of non-Everest & Jennings replacement parts could change the structure of the wheelchair, void the warranty, and create a hazardous condition, which could result in serious personal injury.**

9 LIMITED WARRANTY

SCOPE OF WARRANTY

GF Health Products, Inc. ("GF") warrants to the original purchaser only that it will replace or repair components, at GF's sole discretion, that are defective in material or workmanship under normal use and service. All warranties are conditioned upon the proper use of the products strictly in accordance with good commercial practice and applicable GF instructions and manuals, including proper use and maintenance. To the extent that a third party warrants a component, GF conveys all of its rights under that warranty to the original purchaser, to the extent permitted.

This limited warranty shall only apply to defects that are reported in accordance with the provisions set forth in this warranty document, within the applicable warranty period and which, upon examination by GF or its authorized representative, prove to be a warranty item. (See Obtaining Warranty Service below) This limited warranty is not transferable.

The warranted components and time period are set forth below:

Sideframes and crossbraces:. . . . . five (5) years
Wheels, handrims, front rigging, forks: . . . . . one (1) year
All other durable components not listed above:. . . . . six (6) months

* Labor is not included in the warranty.

ǂ Upholstery is only warranted on material supplied by GF.

ǂ The warranty period is as designated above. If a part is replaced under warranty, the original warranty period will not be affected. All other replacement parts will be subject to the warranty period specified.

The applicable warranty period shall commence from date of shipment to the original customer, unless there is an expiration date on the component in which case the warranty shall expire on the earlier of warranty period or the expiration date.

OBTAINING WARRANTY SERVICE

Customers located in the United States who wish to report a warranty issue, must contact GF directly by calling 1.770.368.4700 or by e-mailing a request to cs@grahamfield.com. Customers located outside the United States must contact the Distributor from whom they purchased the products. In both cases, further directions will be provided once the initial contact is made. This limited warranty shall only apply to defects that are reported within the applicable warranty period. Failure to abide by the specific directions will result in denial of the warranty claim.

The warranty does not cover and GF shall not be liable for the following:

1) Defects, damage, or other conditions caused, in whole or in part, by misuse, abuse, negligence, alteration, accident, freight damage, tampering or failure to seek and obtain repair or replacement in a timely manner;
2) Products which are not installed, used, or properly cleaned and maintained as required in the official manual for the applicable product;
3) Products considered to be of a non-durable nature including, but not limited to: filters, fuses, gaskets, lubricants, and charts;
4) Accessories or parts not provided by GF;
5) Matching of color, grain or texture except to commercially acceptable standards;
6) Changes in color caused by natural or artificial light:
7) Charges by anyone for adjustments, repairs, replacement parts, installation or other work performed upon or in connection with such products which are not expressly authorized in writing, in advance, by GF;
8) Any labor or shipping charges incurred in the replacement part installation or repair;
9) Costs and expenses of regular maintenance and cleaning; and
10) Representations and warranties made by any person or entity other than GF.

ENTIRE WARRANTY, EXCLUSIVE REMEDY AND CONSEQUENTIAL DAMAGES DISCLAIMER

THIS WARRANTY IS GF'S ONLY WARRANTY AND IS IN LIEU OF ALL OTHER WARRANTIES, EXPRESS OR IMPLIED. GF MAKES NO IMPLIED WARRANTIES OF ANY KIND INCLUDING ANY IMPLIED WARRANTIES OF MERCHANTABILITY OR FITNESS FOR A PARTICULAR PURPOSE. IF ANY MODEL OR SAMPLE WAS SHOWN TO THE CUSTOMER, SUCH MODEL OR SAMPLE WAS USED MERELY TO ILLUSTRATE THE GENERAL TYPE AND QUALITY OF THE PRODUCT AND NOT TO REPRESENT THAT THE PRODUCT WOULD NECESSARILY CONFORM TO THE MODEL OR SAMPLE IN ALL RESPECTS. THIS WARRANTY IS LIMITED TO THE REPAIR OR REPLACEMENT OF THE DEFECTIVE PARTS. GF SHALL NOT BE LIABLE FOR AND HEREBY DISCLAIMS ANY DIRECT, SPECIAL, INDIRECT, INCIDENTAL, EXEMPLARY OR CONSEQUENTIAL DAMAGES, INCLUDING, BUT NOT LIMITED TO: DAMAGES FOR LOSS OF PROFITS OR INCOME, LOSS OF USE, DOWNTIME, COVER, OR EMPLOYEE OR INDEPENDENT CONTRACTOR WAGES, PAYMENTS AND BENEFITS. CERTAIN STATES MAY CONFER ADDITIONAL RIGHTS REGARDING WARRANTIES AND IN THOSE STATES GF'S LIABILITY AND THE LIABILITY OF GF'S SUPPLIERS, SHALL BE LIMITED TO THE FULLEST EXTENT PERMITTED BY LAW.

The warranties contained herein, together with GF's current Terms and Conditions, contain all the representations and warranties with respect to the subject matter of this document, and supersede all prior negotiations, agreements and understandings with respect thereto. The recipient of this document hereby acknowledges and represents that it has not relied on any representation, assertion, guarantee, warranty, collateral contract or other assurance, except those set out in this document.

For additional information on this product or this warranty, please contact a GF Customer Service Representative.

NOTES:

1) Additional terms and conditions may apply. See GF's General Terms and Conditions on its website: www.grahamfield.com.
2) Freight claims must be notated on the appropriate shipping documents and must be made with immediacy. International, federal and state regulations govern specific requirements for freight claims. Failure to abide by those regulations may result in a denial of the freight claim. GF will assist you in filing the freight claim.
3) Claims for any short shipment must be made within three (3) days of the invoice date.

10 INDEX

A

Adjustments 13
Anti-tippers, check 22
Arm, adjustable-height, adjust height 14
Arm, adjustable-height, flip back 14
Arm, adjustable-height, lock 14
Arm, fixed-height, flip back 14
Arm, fixed-height, install 14
Arm, fixed-height, lock 14
Arm, fixed-height, remove 14
Arms, check 23

B

Backposts, check 23
Balance 9

C

Caster stems, check 24
CAUTION statement, significance 3
Cleaning your Traveler L3 Plus 23
Crossbraces, tighten 17
Curbs and steps 11**,?**12

E

Elevating legrest, attach 16
Elevating legrest elevation, adjust 16
Elevating legrest, lower 16
Elevating legrest, raise 16
Elevating legrest, remove 16
Elevating legrest—detachable, swingaway 16
Elevating legrest elevation, adjust 16

F

Footrest, attach 15
Footrest, remove 15
Footrest—detachable, swingaway 15

G

Getting started 6

H

Handling tips 9
Handrims, check 22

I

Info statement, significance 3
Introduction 3

M

Maintenance 21

N

NOTICE statement, significance 3

R

Ramps and Inclines 11
Reaching / bending 10
Rear wheel adjustment, check 23
Rear wheels 13

S

Safety precautions 4
Storing the Traveler L3 Plus 19

T

Tires, check 22
Tools, for adjustment, list 13
Tools, for maintenance, list 22
Transfer activities 9
Transporting the Traveler L3 Plus 19
Traveler L3 Plus, illustration 6
Troubleshooting 25

U

Upholstery, check 23

W

WARNINGS 4
WARNING statement, significance 3
Warranty, limited 26
Weight training 12
Wheel bearings, check 24
Wheel lock engagement, check 22
Wheel locks, adjust 18

Everest & Jennings®
by graham-field

Manufactured For:
GF Health Products, Inc.
One Graham-Field Way, Atlanta, GA 30340
Made in China

© 2016 GF Health Products, Inc. All Rights Reserved.
Everest & Jennings is a registered trademark of
GF Health Products, Inc.

EJ_Traveler_XVI-INS-LAB-RevE24

+1 770.368.4700

Information contained herein is subject to change without notice.
The most current and complete product information can be found on our website.

www.grahamfield.com

graham field™