PRODUCT AND CONTACT INFORMATION:

Tel: 800.506.9901 • Fax: 435.787.2301
2410 Heritage Dr. • Logan • UT 84321
sales@stander.com
www.stander.com

English- For assembly instructions and product information, visit the following website: www.stander.com/product-manuals

Español- Para obtener instrucciones de montaje e información del producto, visite el siguiente sitio web: www.stander.com/product- manuals

Deutsch- Montageanleitungen und Produktinformationen finden Sie auf der folgenden Website: www.stander.com/product-manuals

Français- Pour obtenir des instructions d'assemblage et des informations sur le produit, visitez le site Web suivant: www.stander.com/product-manuals

Italiano- Per le istruzioni di montaggio e le informazioni sul prodotto, visitare il seguente sito Web: www.stander.com/product-manuals

LIMITED LIFETIME WARRANTY

To register your product for a Limited Lifetime Warranty, please visit stander.com/product-registration.

Stander, Inc. ("Stander") warrants to the original purchaser that the Product will be free from material defects in material or workmanship for the lifetime of the product. This limited lifetime warranty applies only when the Product is used consistent with the Product's specifications and is non-transferable and shall solely be applicable to the original purchaser.

In the event of a warranty claim, the original purchaser must notify Stander, during the warranty period, in writing of the alleged defect in workmanship or material and must ship the Product, along with the proof of purchase, to Stander.

All shipping costs must be paid by the original purchaser. Stander will not refund or pay for any shipping charges.

If Stander determines, upon its sole determination, that there is a material defect in the material or workmanship of the Product, Stander will either send replacement parts or if needed replace the product and ship a replacement product or parts to the original purchaser.

The limited lifetime warranty does NOT apply to any Product:

(1) That has been damaged in any way.

(2) That has been altered or modified in any way or is used with any unauthorized attachments.

(3) That was not properly installed or that was not used in accordance with the instructions provided by Stander.

(4) That was used for purposes other than those for which the Product was designed or intended.

(5) Damaged due to abuse, misuse, mishandling, neglect, misapplication, accident or abnormal use or storage.

STANDER MAKES NO WARRANTIES OTHER THAN THOSE EXPRESSLY SET FORTH HEREIN. ALL OTHER WARRANTIES, EXPRESS OR IMPLIED INCLUDING ALL (I) IMPLIED WARRANTIES OF MERCHANTABILITY OR FITNESS FOR A PARTICULAR PURPOSE, OR (II) IMPLIED WARRANTIES ARISING FROM ANY COURSE OF DEALING, USAGE OF TRADE, ADVERTISING OR PERFORMANCE OF PRODUCTS TO STANDARDS SPECIFIC TO THE COUNTRY OF IMPORT, ARE HEREBY EXPRESSLY DISCLAIMED.

THIS LIMITED LIFETIME WARRANTY IS THE FULL AND COMPLETE STATEMENT OF STANDER'S LIMITED LIFETIME WARRANTY OF THE PRODUCT, CONSTITUTES THE ENTIRE AND COMPLETELY INTEGRATED LIMITED LIFETIME WARRANTY OF STANDER, SUPERSEDES ALL OTHER STATEMENTS, AND CANNOT BE VARIED BY ANY ORAL OR OTHER WRITTEN STATEMENT.

THE EXCLUSIVE REMEDY FOR BREACH OF THIS LIMITED LIFETIME WARRANTY IS TO RETURN THE PRODUCT FOR THE REPLACEMENT OF THE NONCONFORMING PRODUCT.

UNDER NO CIRCUMSTANCES SHALL STANDER, INC. BE LIABLE FOR ANY SPECIAL, INCIDENTAL, EXEMPLARY, PUNITIVE, CONSEQUENTIAL DAMAGES, OR OTHER DAMAGES, BASED UPON BREACH OF THIS LIMITED WARRANTY, BREACH OF CONTRACT, OR STRICT LIABILITY.

Some states do not allow limitations on how long an implied warranty lasts. This warranty gives you specific legal rights, and you may also have other rights which vary from state to state. To obtain service under this Limited Warranty, you can reach Stander at (800) 506-9901 or (435) 755-0453.

DISCLAIMER: Neither Stander nor the manufacturer will be liable for any harm or injury that results from the improper use or assembly of the product.

Do not use or attempt to install this product unless you read and understand these warnings and follow all instructions.

EC REP EMERGO EUROPE Westervoortsedijk 60 6827 AT Arnhem The Netherlands

Stander, Inc. 2410 S. Heritage Dr. Logan Utah 84321 USA www.stander.com 1.800.506.9901

MD

WARNINGS

EZ Swivel Overbed Table (Item 6000), Freedom Overbed Table (Item 7700), Universal Overbed Table (Item 8650), Universal Overbed Table XL (Item 8650-XL): The device is intended to hold up to 20lbs (9kg) directly on the tray. This is not an assistive device for standing or sitting.

a) Do not use or install this product unless you read and understand these warnings and instructions to ensure the product is properly used. If you have any questions regarding the use, associated risks, or anything at all regarding this product call Stander at (800) 506-9901 or (435) 755-0453.

b) Do not alter the product in any way or vary the intended use of the product.

c) Children should not be allowed to hang on or play with this product.

d) No external items should be attached to this product.

e) This product is for adult use only. It is not intended to be used by individuals who have paralysis, symptoms of dementia, sleeping disorders, incontinence, pain, uncontrolled body movement, or are unable to walk safely without assistance. It should not be used by individuals who suffer from confusion, restlessness, terminal restlessness, or are under the influence of medications, drugs or any substance that could impair their balance or judgment, or any other unforeseeable reasons that could affect the users physical and mental ability to safely use this product. If you have questions, please consult a physician before using this product. This product is not intended to carry the full weight of an individual.

f) If this product is used in a nursing home, assisted living center, or a similar facility, follow these instructions and all of the institution's installation policies. If this product does not comply with those installation polices, do not install this product.

g) SAFETY PRECAUTIONS: Serious injury or harm can result if the product is not properly installed. Stander is committed to providing safe products and informing the user of ways to prevent accidents.

h) If product is removed, it must be reinstalled per enclosed ASSEMBLY INSTRUCTIONS.

i) Regularly check the product to make sure it is installed and positioned as per the ASSEMBLY INSTRUCTIONS. This product should not be used on any lightweight furniture that would allow the product to become dislodged or move during use of the product.

j) Additional safety measures should be taken for users that are a high risk. High risk users include those who are not mentally conscious (including those individuals under medication), users who have size or weight conditions, or any condition that impair their ability to use the product without assistance.

k) DISCLAIMER: Neither Stander nor the manufacture are liable for any harm or injury that may result or has resulted from the improper use or assembly of the product.

l) If you have any concerns or questions regarding these precautions, please contact Stander at (800) 506-9901.

m) In the rare possibility of a serious event with any Stander product, contact a customer service representative at (800) 506-9901 or (435) 755-0453 immediately. Also report to the competent authority of your member state. A serious event is defined as death or serious deterioration in health that results in a life-threatening illness or injury, permanent impairment, hospitalization, or surgical intervention.

⚠ WARNING ENTRAPMENT AND FALL HAZARD

• People with Alzheimer's disease or dementia, or those who are sedated, confused, or frail, are at increased risk of entrapment and falls.

• Failure to comply with these conditions could put the user(s) at risk of entrapment or falling.

⚠ WARNING ENTRAPMENT, STRANGULATION, SUFFOCATION AND FALL HAZARD

Gaps in and around this product can entrap and kill. People with Alzheimer's disease or dementia, or those who are sedated, confused, or frail, are at increased risk of entrapment and strangulation. People attempting to climb over this product are at increased risk of injury or death from falls. Always make sure this product is properly secured to bed. If product can move away from bed or mattress, it can lead to entrapment and death.

⚠ WARNING SUFFOCATION ,STRANGULATION, ENTRAPMENT HAZARD

If product is installed incorrectly or moves from its initial position gaps can occur which can entrap and kill. People with Alzheimer's disease, dementia or other neurological conditions, or those who are sedated, confused, or frail, are at increased risk of entrapment, suffocation, and strangulation.

- NEVER use unless product is tight against mattress, without gaps, and at least 12 ½″ (32cm) from headboard and footboard.
- NEVER use with children.
- NEVER use on toddler, bunk, water, or inflatable beds or on beds with mattress toppers or soft compressible pads.

Product Position: Installed product must be at least 12.5 inches (32cm) from the head and foot plane of the bed, as shown in *FIGURE A*. This is required to prevent potential entrapment hazards.

Safety Strap and Other Securing Means: The product must be secured and maintained as close to the mattress as possible as depicted in *FIGURE B* or *C*. When properly installed there is no gap between the product and the mattress.

WARNING: If the product is not properly secured, it may move into an unsafe position which increases the danger of entrapment. See enclosed ASSEMBLY INSTRUCTIONS for properly securing product to bed.

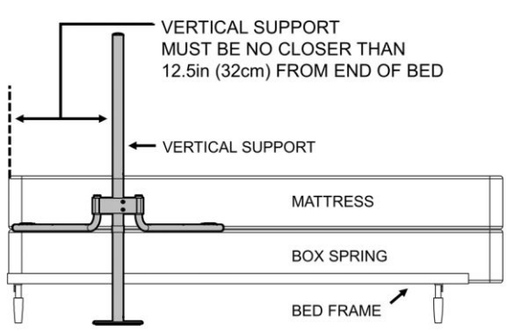

FIGURE A

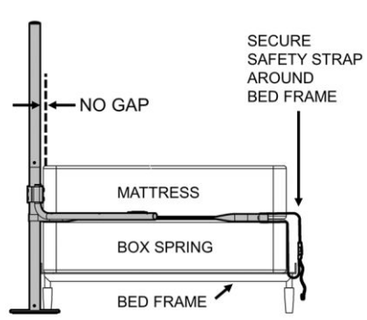

FIGURE B

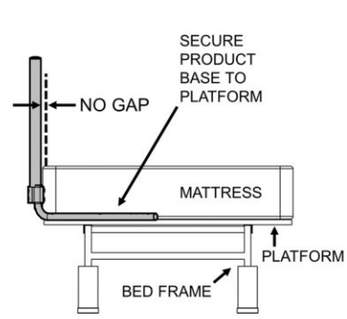

FIGURE C

ASSEMBLY INSTRUCTIONS

Specifications:

Product Name: EZ Swivel Overbed Table (Item 6000), Freedom Overbed Table (Item 7700), Universal Overbed Table (Item 8650), Universal Overbed Table XL (Item 8650-XL)

Product #: 6000, 7700, 8650, 8650-XL

Maximum Tray Capacity: 20lbs (9kg)

Compatibility: For use on standard or adjustable beds.

Cleaning: Clean product with warm water and soap. Dry thoroughly before using.

Recycling: Product should be recycled in accordance with national guidelines.

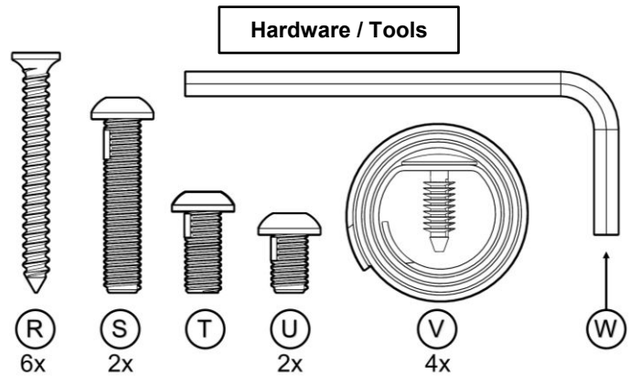

1. Remove product from box and identify all parts as shown in *FIGURE 1.*

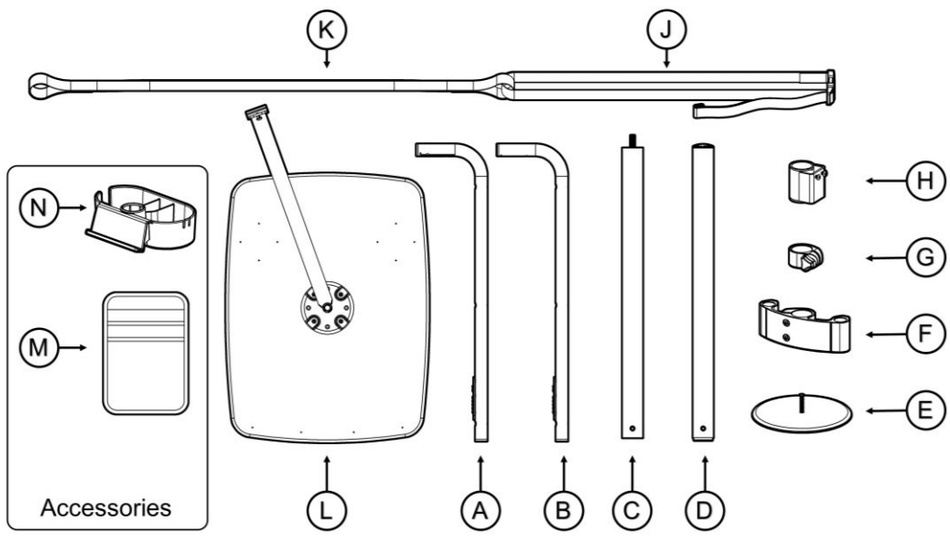

FIGURE 1

FOR INSTALLATION ON ADJUSTBLE BEDS SKIP TO STEP 11

2. Assemble items **C**,**D**,**E** as shown in *FIGURE 2.* Tighten tubes and base firmly together. Tighten both set screws with **W**.

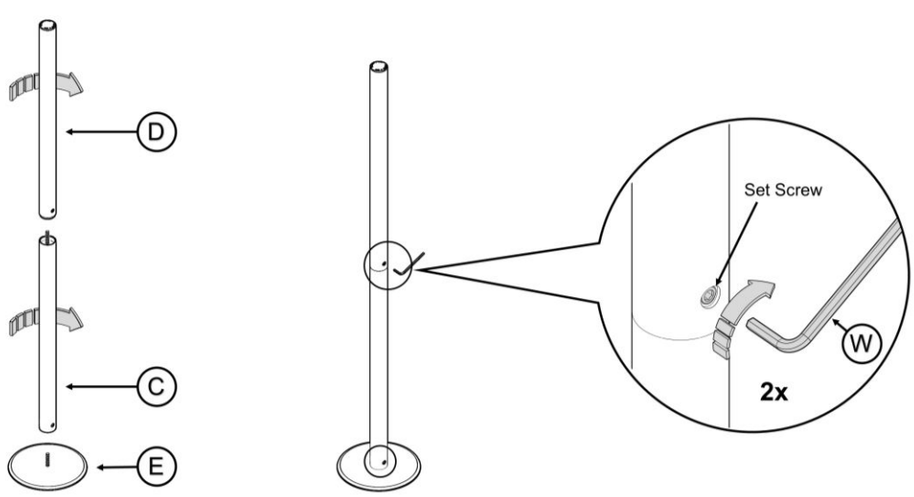

FIGURE 2

3. Partially thread bolt **S** into upper holes in **F**. Do not thread too far – bolt should not block assembly of legs. Lay main support F on flat surface so markings can bee seen. *FIGURE 3*

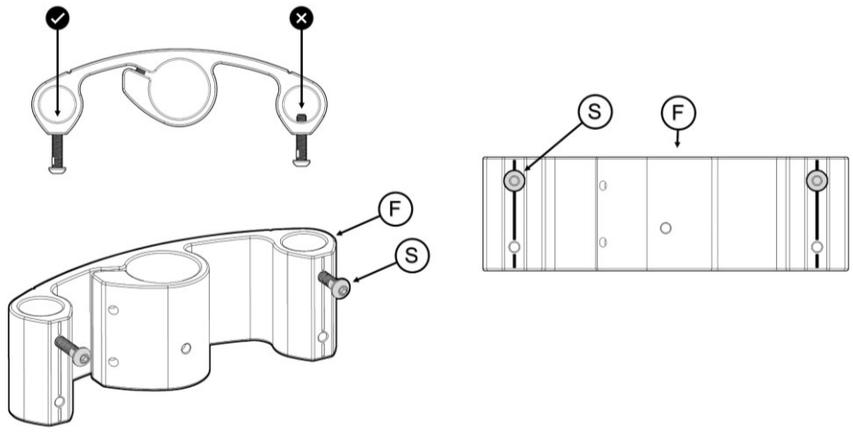

FIGURE 3

4. Align top edge of **F** with horizontal line on leg **A**. Align holes on **F** with DOTTED line on **A**. Screw in **S** and tighten firmly with tool **W**. Insert **U** into lower hole and tighten firmly. Repeat for leg **B**. Legs should be at an angle to one another when assembled. *FIGURE 4*

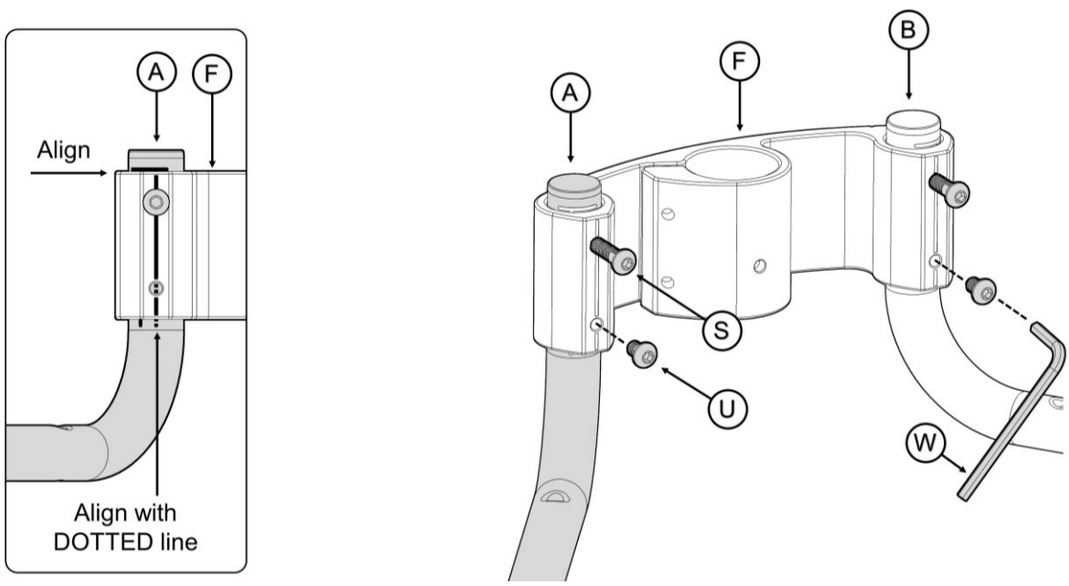

FIGURE 4

5. First, put free loop of **K** over top of pole and slide down. Place **F** with legs attached over top of pole as shown and slide down. Twist the assembly if needed to help it slide down. **K** should be under **F**. Place legs directly on box spring or bed frame. Push entire assembly so that there is no gap between **F** and mattress. Pull buckles on **J** to opposite side of bed. *FIGURE 5*

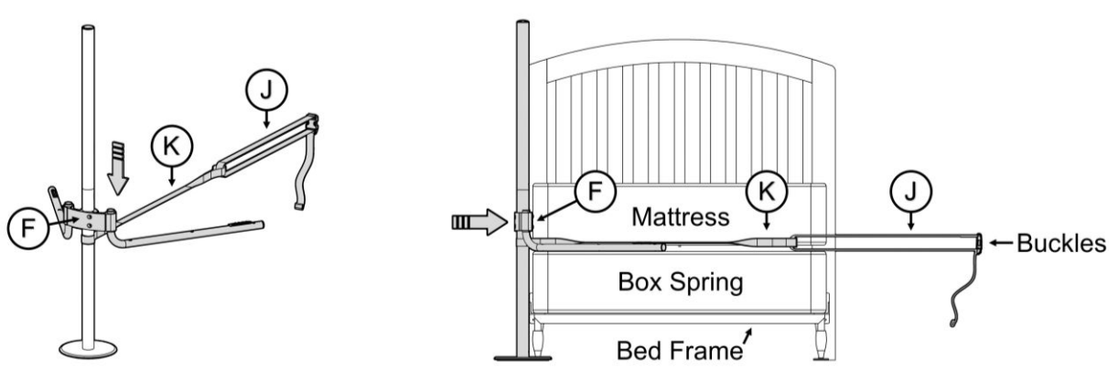

FIGURE 5

6. This step is for beds with box springs and platform bases, for other bed frames see step 7. Open buckles on **J** and loop one buckle around bed frame and snap buckles back together. Tighten strap **J** by pulling loose end of strap. Make sure main support is plumb (completely vertical). Tighten front screws in **F** until both are secure. *FIGURE 6*

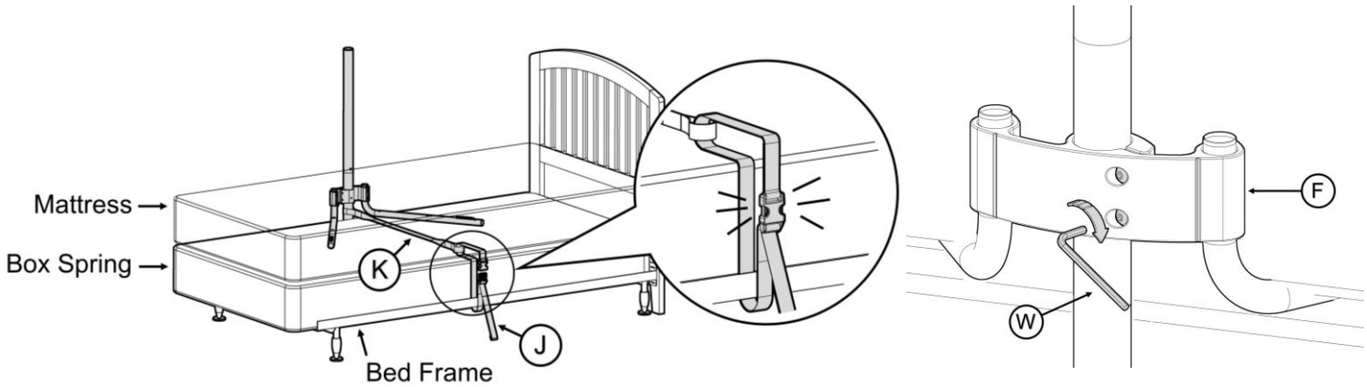

FIGURE 6

7. For metal frame beds and slat beds, add **V** to secure legs to frame or slats. Insert plastic barb from **V** into holes in **A** and **B** at locations shown. Wrap **V** securly around frame or slats. Open buckles on **J** and loop one buckle around bed frame and snap buckles back together. Tighten strap **J** by pulling loose end of strap. *FIGURE 7*

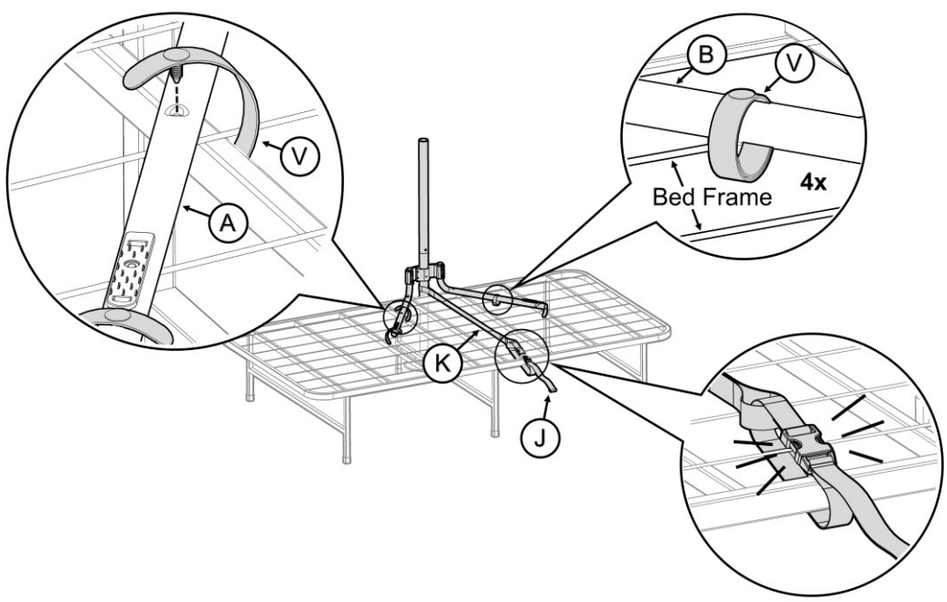

FIGURE 7

8. Place **G** on pole and set to desired height. Orient **H** with screws at bottom and place on pole. Hang **L** on **H** as shown. *FIGURE 8*

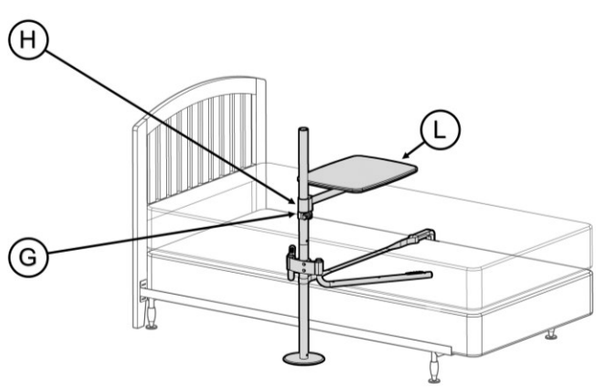

FIGURE 8

9. Use Center Screw on **L** to level tray. Once level, firmly tighten two outer screws on **H** to lock in place. *FIGURE 9*

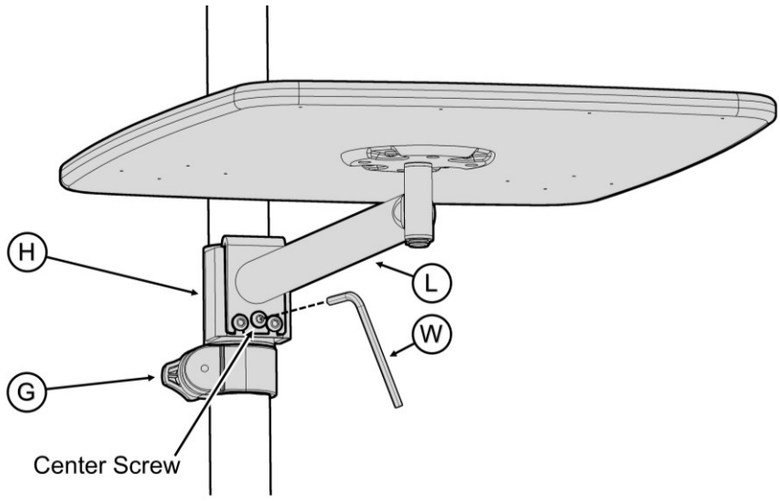

FIGURE 9

10. Accessories: If included, place **M** and **N** on product as shown in *FIGURE 10A.*

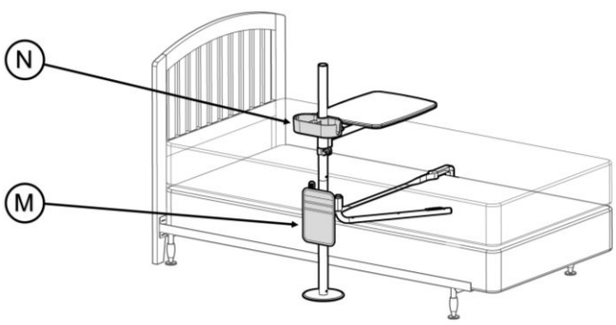

FIGURE 10A

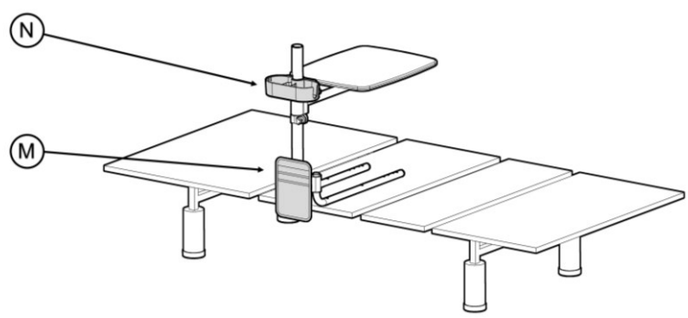

FIGURE 10B

INSTALLATION ON ADJUSTBLE BEDS

11. Remove grippers from legs **A** and **B** as shown. *FIGURE 11*

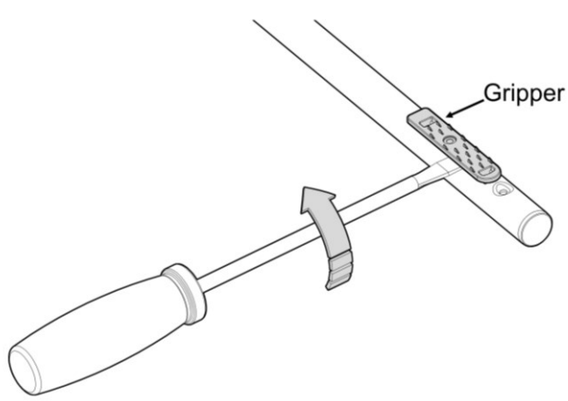

FIGURE 11

12. Partially thread bolt **S** into lower holes in **F**. Do not thread too far – bolt should not block assembly of legs. Lay main support **F** on flat surface so markings can bee seen. *FIGURE 12*

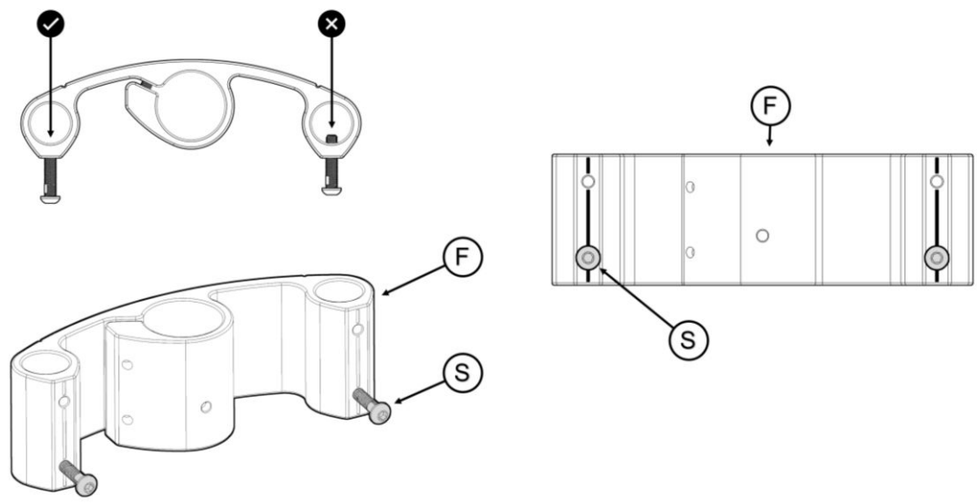

FIGURE 12

13. Align top edge of **F** with horizontal line on leg **A**. Align holes on **F** with SOLID line on A. Screw in **S** and tighten firmly with tool **W**. Insert **U** into upper hole and tighten firmly. Repeat for leg **B**. Legs should be parallel to one another when assembled. *FIGURE 13*

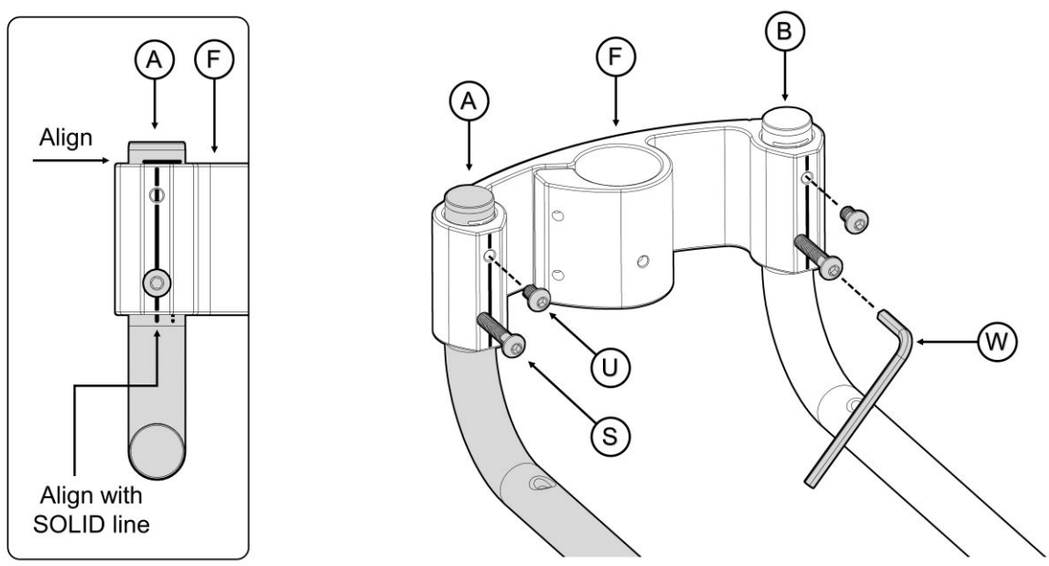

FIGURE 13

14. Attach assembly to legs to Stationary Section of bed base using **R** – do not overtighten screws. FIGURE 14
IMPORTANT: There should be no gap between **F** and mattress.
NOTE: Make sure screws do not interfere with any components on underside of bed base.

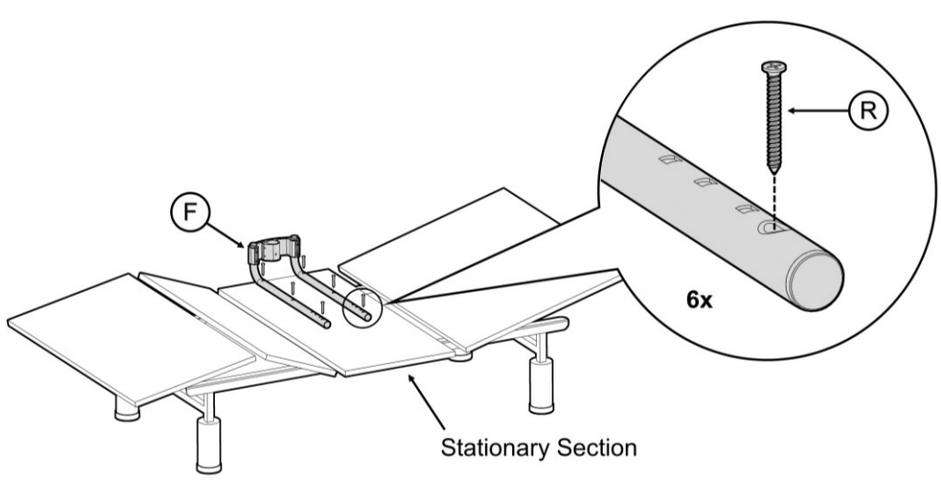

FIGURE 14

15. Remove Set Screw from **D**. Insert **D** into **F** and align holes. Screw **T** into **F** and secure. Alternate tigntening screws on front side of **F** with **W** until both are secure.

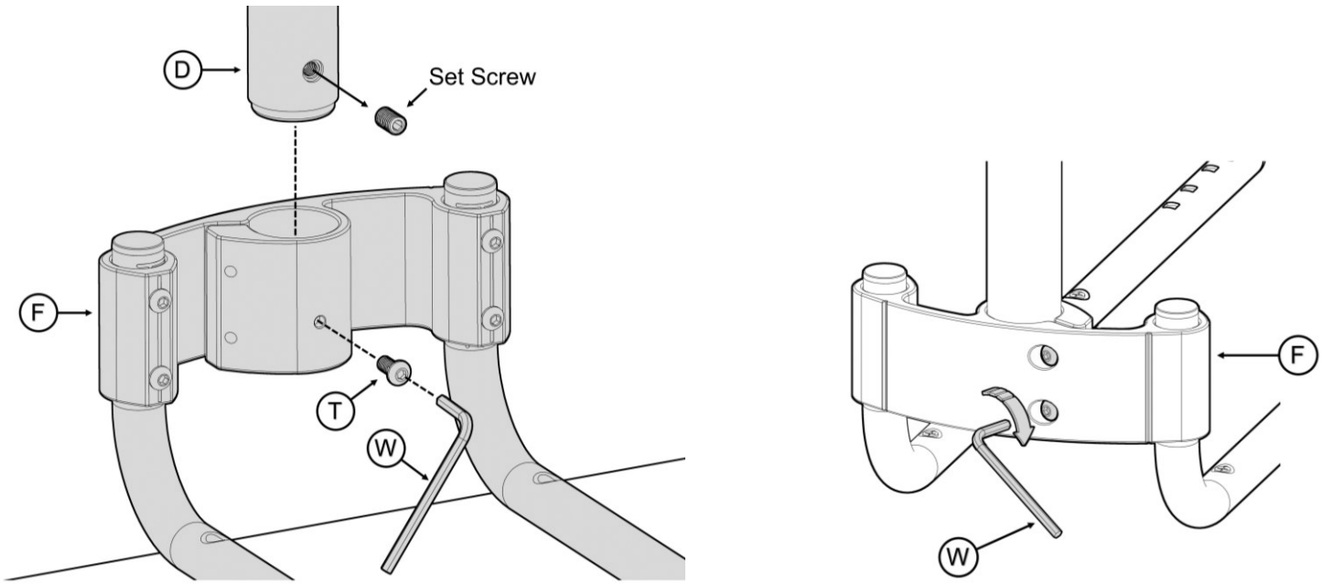

FIGURE 15

16. Place **G** on pole and set to desired hieght. Place **H** on pole and hang **L** on **H** as shown. *FIGURE 16*

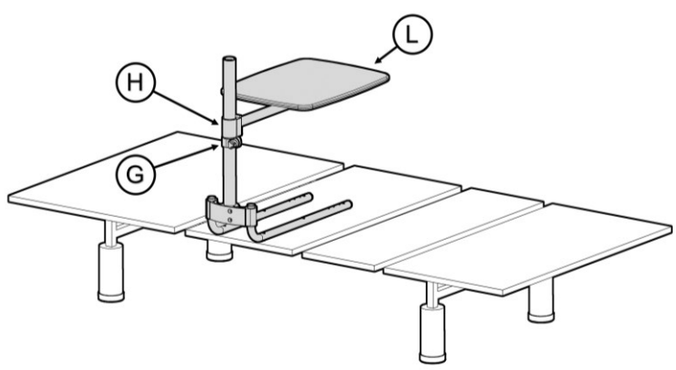

FIGURE 16

17. Use Center Screw on **L** to level tray. Once level, firmly tighten two outer screws on **H** to lock in place. *FIGURE 17*

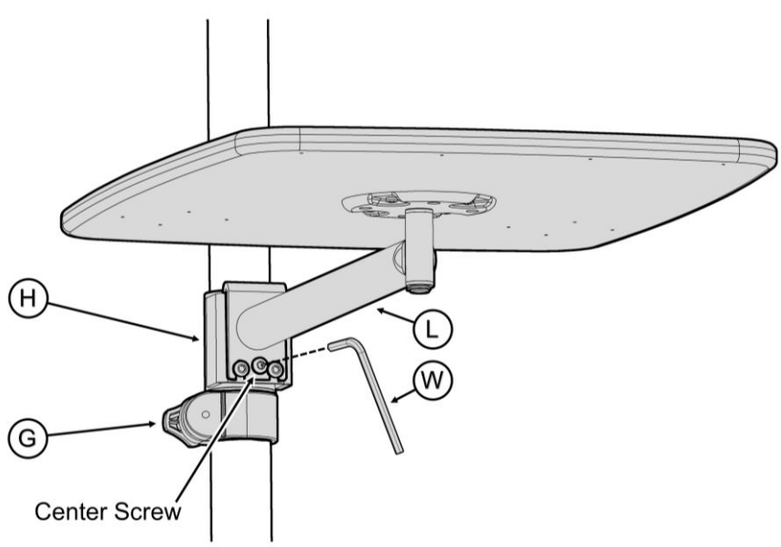

FIGURE 17

18. Accessories: If included, place **M** and **N** on product as shown in *FIGURE 10B.*