Joerns Hoyer®

Service - Parts Manual

Hoyer® HPL700

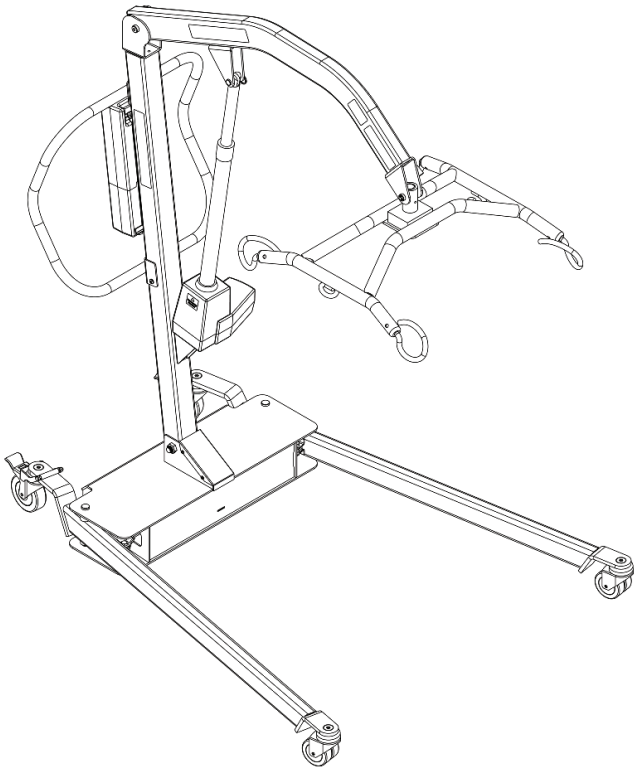

NO	PART NUMBER	DESCRIPTION
1	39001076	Rear Caster
2	39001077WH	WHITE Straight-line Caster Guide
	39001077AL	BEIGE Straight-line Caster Guide
3	39001078	Front Caster
4	39001079WH	WHITE Mast Assembly
	39001079AL	BEIGE Mast Assembly
5	39001080WH	WHITE Boom Assembly
	39001080AL	BEIGE Boom Assembly
6	39001081WH	WHITE Push Handle Assembly
	39001081AL	BEIGE Push Handle Assembly
7	39001100	Leg Pivot Component
8	39001083WH	WHITE Right Leg Assembly
	39001083AL	BEIGE Right Leg Assembly
9	39001084WH	WHITE Left Leg Assembly
	39001084AL	BEIGE Left Leg Assembly
10	39001086-S2	Calibrated Control Box - Smart Monitor (White Lift)
	39001086	Control Box - Standard (Beige Lift)
11	11012180	Battery
12	11015532	User Hand Control - Smart Monitor (White Lift)
	11013611	User Hand Control - Standard Control Box (Beige Lift)
13	11012182	Mains Cable
14	39001440	Lifting Actuator (White Lift)
	39001092	Lifting Actuator (Beige Lift)
15	400-3007	Bracket
16	39001094	Leg Actuator
17	11016037	Replacement Label Set (White Lift)
	39001095	Replacement Label Set (Beige Lift)
18	39001096WH	WHITE Complete Base Assembly
	39001096AL	BEIGE Complete Base Assembly
19	39001443	Charger and Stand
20	39001675	Quick Release Pin
21	39001097WH	WHITE Front Cover
	39001097AL	BEIGE Front Cover
22	39001098WH	WHITE Rear Cover
	39001098AL	BEIGE Rear Cover
23	39001099WH	Cradle W/Scale (White Lift)
	39001099AL	Cradle W/Scale (Beige Lift)
24	39001082WH	WHITE 6-Point Bari Loop Spreader Bar
	39001082AL	BEIGE 6-Point Bari Loop Spreader Bar
25	39001101WH	WHITE Tie Rods and Center Pivot Components
	39001101AL	BEIGE Tie Rods and Center Pivot Components
26	39001587	6-Point Loop Spreader Bar
27	39001588	6-Point Loop Spreader Bar with Scale
28	39001457	Actuator Power Lead Cable

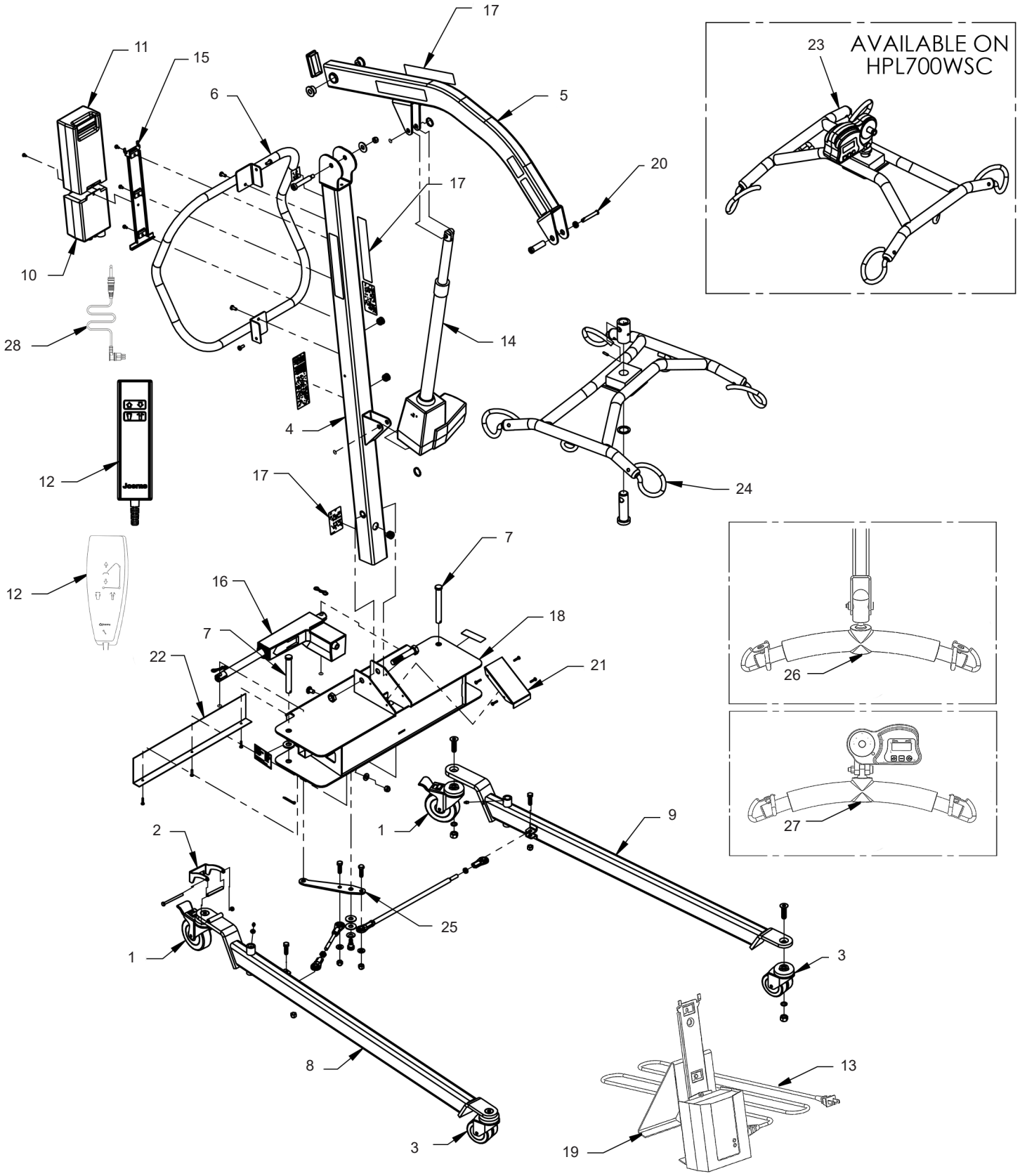
17
11
15
6
5
20
17
10
28
14
4
12
17
24
7
12
16
18
7
22
21
26
27
2
1
9
25
1
3
8
13
3
19
23
AVAILABLE ON
HPL700WSC

Service and Maintenance

Required Tools: Needle Nose Pliers,Standard and Phillips Screw Drivers, Standard and Metric Hex Key Sets (Allen wrenches), T20 and T27 Torx Drivers,19mm Wrench, 9/16" Wrench 9/16" Socket, 15/16" Wrench, 15/16" Socket, Medium Strength Loctite 248 (Blue stick type)

In the event that an inspection of the following components results in the need to replace hardware or assemblies, see the individual service kits listed in the previous section of this service manual. Remove lift from service until required repairs are complete.

Note: Joerns Healthcare recommends that nyloc nuts be replaced once removed.

Spreader Bar

1. The spreader bar assembly is attached to the boom using a security pin that is housed in a steel outer sleeve. Remove the inner security pin by depressing the security tab on one end and pulling the pin out in the opposite direction.
2. Examine the pin for signs of wear and for any damage that may have occurred to the security tab.
3. Be sure to support the spreader bar before removing the outer sleeve as this is the attachment point. Pull the outer sleeve bushing from the boom pivot. Inspect the outer sleeve for wear.
4. With the outer sleeve removed examine the attachment point of the boom for wear. If the pivot hole is out of round the boom and security pin assembly should be replaced.
5. With the spreader bar detached from the boom examine the attachment point for wear. This applies to both scale and non-scale versions of the HPL700 patient lift.
6. Disassembling the kingpin or scale from the spreader bar is not recommended, and may result in injury or death if tampered with.
7. Check the spreader bar sling hooks for wear or damage. Ensure that the hooks are not bent.

After performing all actions and checks in the previous section reassemble the spreader bar as follows: Instructions apply to both the scale and non-scale versions.

1. Lubricate the main pivot components (security pin, outer sleeve, and boom pivot attachment holes) with any light food grade spray lubricant. Ensure that the there is ample lubricant applied to the contacting surfaces of the security pin and sleeve. Also apply lubricant to the boom pivot attachment holes.
2. Align the spreader bar attachment point to the boom pivot attachment holes. Insert the outer sleeve of the security pin through the boom attachment holes. Scale versions will have additional spacers that will need to be assembled to each side of the scale housing before the outer sleeve can be inserted in the boom attachment holes.
3. Insert the security pin through the outer sleeve ensuring that the security tab is visible on the opposite side of the outer sleeve when it is assembled.

Note: It is critical that the spreader bar assembly is inspected after reassembly prior to returning the lift to service.

Boom / Mast

1. Examine the shoulder bolt and nut that attaches the boom to the mast pivot. Ensure that both are fully tightened.
2. Inspect the pivot attachment area of the mast and boom. The bushings located at the pivot point in the boom will need to be replaced if cracked or showing signs of excessive wearing.
3. Check that there is no excessive movement allowed in the mounting area both vertically and horizontally. This will be a good indication of wear and a full inspection of the pivot and mounting area is required. To fully inspect the bushings and pivot area follow these instructions:
   a. Remove the spreader bar per previous instructions.
   b. Lower the boom to its lowest point.
   c. Loosen the shoulder bolt and nut using a ¼” hex key and 9/16” wrench.
   d. Remove the fasteners and lift the boom from the mast pivot.
   e. Inspect the black bushings located on the boom for cracks and any signs of significant wear.
   f. Inspect the attachment point on the Mast for signs of wear.
   g. If no action is required upon inspection of the pivot area, reassemble, applying any light food grade lubricant to the interior diameter of the bushings and mast pivot area. Insert the shoulder bolt and replace the nyloc nut with a new one.
   h. Fully tighten the shoulder bolt and nut.
4. Inspect the attachment point of the actuator at the boom. Without disassembling the actuator from the attachment point look for signs of wear at the pivot. Check that there is no excessive movement allowed in the mounting area both vertically and horizontally. This will be a good indication of wear and a full inspection of the pivot pin and mounting area is required. To disassemble the actuator and pivot follow these instructions:
   a. Remove the kick-out ring from the pivot pin, and remove the pin. Lower the actuator to the ground while holding the boom up. Inspect the pin for wear and deformation. Replace the pin and kick-out ring if necessary.
   b. Inspect the actuator mounting bracket on the boom for excessive wear of the holes on both sides of the bracket.
   c. If no action is required upon inspection of the pivot area, reassemble, applying any light food grade lubricant to the interior diameter of the pivot holes. Lift the actuator and align with the mounting bracket. Insert the pivot pin and insert the kick-out ring.
5. Inspect the attachment point of the actuator at the mast. Without disassembling the actuator from the attachment point look for signs of wear at the pivot. Check that there is no excessive movement allowed in the mounting area both vertically and horizontally. This will be a good indication of wear and a full inspection of the pivot pin and mounting area is required. To disassemble the actuator and pivot follow these instructions:
   a. Remove the kick-out ring from the pivot pin, and remove the pin. Lower the actuator and boom. Inspect the pin for wear and deformation. Replace the pin and kick-out ring if necessary.
   b. Inspect the actuator mounting bracket on the boom for excessive wear of the holes on both sides of the bracket.
   c. If no action is required upon inspection of the pivot area, reassemble, applying any light mineral-based grease, or silicone spray to the interior diameter of the pivot holes. Lift the actuator and align with the mounting bracket. Insert the pivot pin and insert the kick-out ring.

Mast/Handle

1. Inspect the handle fasteners at the mast. Ensure that all fasteners are secure and in place.
2. Tighten any fasteners that are loose with a T27 Torx driver.

Battery Pack and Control Box

1. Remove the battery pack and control box from the bracket. The control box is held in place by one (1) screw mounted to the metal bracket.
2. Inspect the bracket for damage and ensure that the three (3) screws are secure and in place.
3. Reattach the control box.
4. Check the engagement of the battery pack with the mounting. The battery pack should snap in place and be held firmly by the latch at the top of the battery pack.
5. Inspect the hand control and cables for obvious signs of damage. Damage to the hand control and particularly the cable can cause intermittent failures. The hand control should be replaced if damage is evident to the control or cables.
6. Check the operation of the hand control. Press the up and down buttons and confirm that the boom moves in the correct direction.
7. Press the leg open and close buttons confirming that the legs move in the proper direction.
8. Check the operation of the emergency stop switch. Push the red button on the control box. It should remain depressed and operation of the lift should not be possible.
9. Power can be restored by twisting the red button clockwise and releasing.

Mast/ Base

1. Examine the attachment points of the mast to the base. There are two connections that will need to be inspected. The first is located at the top of the base, and consists of a 5/8” bolt and nut. Ensure that the nut is tight using a 15/16” wrench in combination with a 15/16” socket and torque wrench. The second connection is located on the interior of the base. This connection can be checked for looseness by grasping the lift’s handle, placing a foot on the back of the base, and firmly pushing and pulling the mast. If there is any excessive movement front to back, additional inspection is required. To inspect the attachment point follow these instructions:
   a. With assistance, tip the lift to one side and lay it on the floor.
   b. The attachment that will cause the mast to feel loose is located inside the mast tube and is a nyloc nut and washer.
   c. If the nut is loose be sure to tighten using a 9/16” socket and torque wrench.
   d. With assistance, tip the lift to the upright position and perform the mast check again.
   e. If the fasteners are missing remove lift from service until the required hardware is replaced.

Base/ Legs

1. For stability and safety take note that when the legs are in the closed position they should measure approximately 27” from the outsides of the caster brackets both front and back. They should also be at a 90 degree angle to the base. If these measurements are not correct upon inspection of the lift additional maintenance may be required.

2. Inspect the pivot points of the legs at the base. Ensure that there is not excessive wear of the holes or pins at the top of the base.
3. With assistance tip the lift to one side laying it on the ground. Inspect the cotter pin connections for security. Also, inspect the holes in the base and pivot pins for excessive wear.
4. In the event that a cotter pin is damaged or missing remove the lift from service until the required hardware is replaced.
5. With the lift on its side inspect the connections inside the base at the central pivot. Ensure that all fasteners are secure and in place.
6. Inspect the tie-rods and the tie-rod ends for signs of excessive wear. In addition, inspect the steel pivot attached to the tie-rods for signs of excessive wear.
7. To inspect the actuator and its attachment points, remove the three (3) screws holding the rear cover in place with a T20 Torx driver.
8. Without disassembling the actuator inspect the attachment points of the actuator to the base and central pivot for excessive wear. Check that there is no excessive movement allowed in the mounting area. This will be a good indication of wear and a full inspection of the pivot pin and mounting area is required. To disassemble the actuator from the pivots follow these instructions:
   a. Support the leg that is highest to remove pressure from the actuator mounting. Remove the bowtie clip from the pivot pin, and remove the pin. Lower the leg as needed. Inspect the pin for wear and deformation.
   b. Inspect the actuator mounting plate for excessive wear of the hole.
   c. While supporting the actuator remove the bowtie clip and pin from the central pivot plate. Inspect the pin for wear and deformation. At this point the actuator will be free from the base. Place it in a safe area until reassembly.
   d. Inspect the central pivot for wear at the hole.
   e. If no action is required upon inspection of the pivot area, reassemble, applying any light food grade lubricant to the interior diameter of the pivot holes.
9. Ensure that the bowtie clips are assembled to the pivot pins and that they are secure.
10. Reassemble the rear cover and screws.
11. With assistance, return the lift to the upright position.

Casters/ Straight-Line Caster Guide

1. Inspection of the front and rear casters for damage. Ensure that the fasteners are securely attached to the mounting brackets.
2. Make sure the casters swivel and the wheels rotate freely. Remove any build up of threads, hair, or dust that may clog bearings and prevent free rotation.
3. Inspect the rear caster’s braking mechanism. A foot-operated pedal activates the brakes. Ensure the brake pedals lock in place and that the lift does not move when the brakes are activated.
4. Lubricate if needed with a light food grade lubricant.
5. Examine the straight-line caster guide located on a rear caster. Check for damage and ensure that the fasteners are secure.
6. Engage that caster guide and push the lift forward. The guide should only allow for straight line movement.

Warranty

This Warranty covers HPL700 Lifts only. Lifts not covered under this warranty include, but are not limited to: Advance-H, HML400, HPL402, C-HLA, all HoyerPro (and variations).

HPL700 Lifts are guaranteed for a period of two (2) years from the date of delivery against defects in materials and workmanship under normal use and service. This warranty includes all mechanical and electrical components (excluding Batteries and casters).

Steel structural components and mechanical components on lifts are covered under warranty for a period of five (5) years from the date of delivery.

Damage caused by use in unsuitable environmental conditions or failure to maintain the product in accordance with user and service instructions is not covered. Any alteration, modification, or repair unless performed by or authorized in writing by Joerns Healthcare will void this warranty.

Parts

An HPL700 Lift contains various parts that wear from normal use. These parts, such as batteries and casters are not covered under the two-year warranty but are covered for 90 days after date of delivery.

Joerns Healthcare's obligation under this warranty is limited to supplying replacement parts, servicing, or replacing, at its option, any product which is found by Joerns Healthcare to be defective.

Warranty replacement parts are covered by the terms of this warranty until the product's original warranty period expires.

When requested by Joerns Healthcare, parts must be returned for inspection at the customer's expense. Credit will be issued only after inspection.

Service

Most service requests can be handled by the facility Maintenance Department with assistance from the Joerns Healthcare Product Service Department.

Most parts requested can be shipped next day air at the customer's expense.

Should a technician be required, one will be provided by Joerns Healthcare, at our discretion. Only the Joerns Healthcare Product Service Department can dispatch authorized technicians.

This warranty is extended to the original purchaser of the equipment.

Joerns Healthcare Inc.
2100 Design Road
Arlington, TX 76014
(T) 800-826-0270 • (F) 800-457-8827
www.joerns.com • email: info@joerns.com

6120049 Rev E • DCO19-2506
© 2020, Joerns Healthcare. All rights reserved.